Quick Start Guide

Tek-DP 1620A

Cone Meter

796 Tek Drive, Crystal Lake, IL 60014 USA
+1 847 857 6076 | +1 847 655 7428
+1 847 655 6147
www.tek-trol.com

Quick Start Guide

1. Before you begin

This guide provides basic guidelines to assist you in quickly getting started.

Installation of the transmitter in an explosive environment must be in accordance with the appropriate local, national, and international Standards, codes, and practices. Review the approvals section of the Tek-DP 1620A reference manual for any restrictions associated with a safe installation.

Do not remove the transmitter covers in explosive environments when the circuit is live.

Make sure the transmitter is installed by qualified personnel and in accordance with applicable codes of practice.

2. Unpack

Tek-DP 1620A Cone Meter

3. Dimensional Drawings

- Beveled End

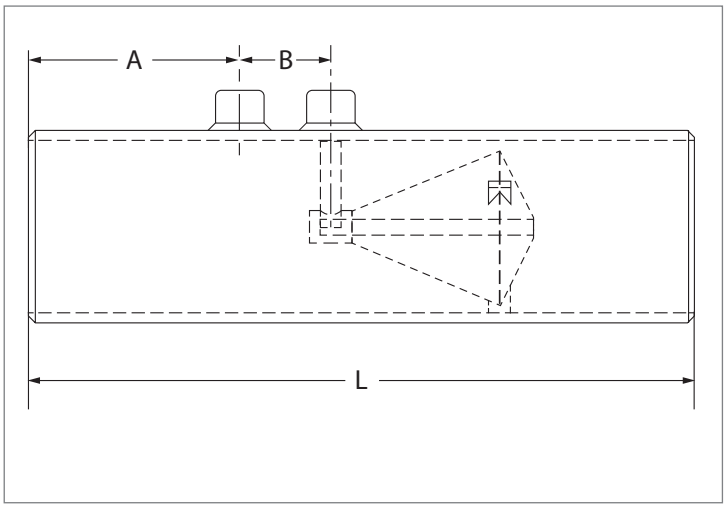

Size in (mm)	L in(mm)	A in (mm)	B in (mm)
2" (50)	9.5" (241)	4.25" (108)	2.13"(53)
3" (80)	12.5" (317)	4.25" (108)	2.13"(53)
4" (100)	15.5" (394)	3.38"(86)	2.13"(53)
6" (150)	19.25" (489)	4.13"(105)	2.13"(53)
8" (200)	23.75" (603)	5.75" (145)	2.13"(53)
10" (250)	29.75" (755)	6.25"(159)	2.13"(53)
12" (300)	35.75" (908)	6.5"(165)	2.13"(53)

Fig 1: Beveled End

***Note:** All Tek-Trol Cone Meters Have Support Gussets, (See Dimension Charts on next pages)

- Raised-Face Slip on Flange

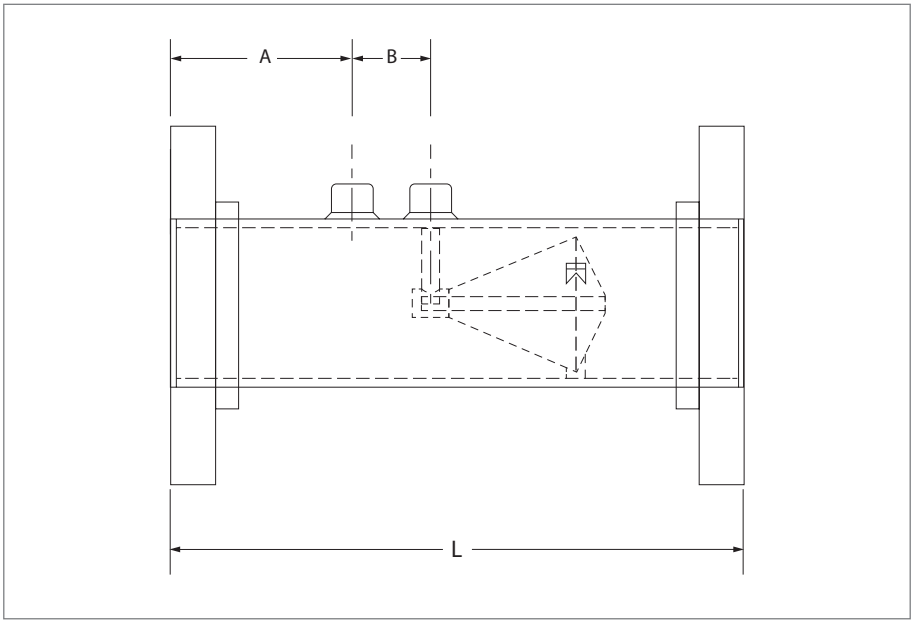

Fig 2: Raised-Face Slip on Flange

Size in inches (mm)	150# RF/ SO			300# RF/ SO			600# RF/ SO		
	L in (mm)	A in (mm)	B in (mm)	L in (mm)	A in (mm)	B in (mm)	L in (mm)	A in (mm)	B in (mm)
2″ (50)	10″ (254)	4.5″ (112)	2.13″(53)	10″ (254)	4.5″ (112)	2.13″(53)	10″ (254)	4.5″ (112)	2.13″(53)
3″ (80)	13″ (322)	4.5″ (112)	2.13″(53)	13″ (322)	4.5″ (112)	2.13″(53)	13″ (322)	4.5″ (112)	2.13″(53)
4″ (100)	16″ (400)	3.63″(92)	2.13″(53)	16″ (400)	3.63″(92)	2.13″(53)	16″ (400)	3.63″(92)	2.13″(53)
6″ (150)	19.75″ (495)	4.38″(111)	2.13″(53)	19.75″ (495)	4.38″(111)	2.13″(53)	19.75″ (495)	4.38″(111)	2.13″(53)
8″ (200)	24″ (609)	6″ (152)	2.13″(53)	24″ (609)	6″ (152)	2.13″(53)	24″ (609)	6″ (152)	2.13″(53)
10″ (250)	30″ (762)	6.5″(165)	2.13″(53)	30″ (762)	6.5″(165)	2.13″(53)	30″ (762)	6.5″(165)	2.13″(53)
12″ (300)	36″ (914)	6.75″(171)	2.13″(53)	36″ (914)	6.75″(165)	2.13″(53)	36″ (914)	6.75″(165)	2.13″(53)

- Raised-Face Weld Neck

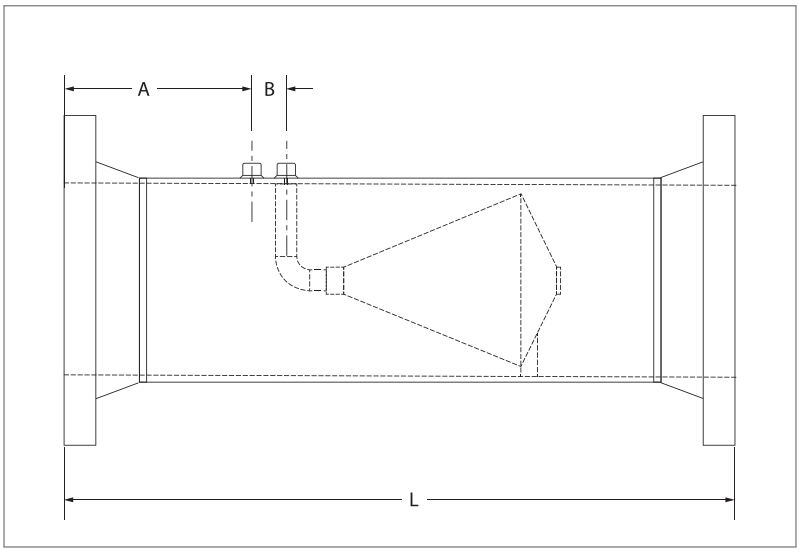

Fig 3: Raised-Face Weld Neck

Size in inches (mm)	150# RF/ SO			300# RF/ SO			600# RF/ SO		
	L in (mm)	A in (mm)	B in (mm)	L in (mm)	A in (mm)	B in (mm)	L in (mm)	A in (mm)	B in (mm)
2" (50)	14.5" (368)	6.75" (171)	2.13"(53)	15" (381)	7" (175)	2.13"(53)	15.75" (400)	7.5" (185)	2.13"(53)
3" (80)	18" (450)	7" (175)	2.13"(53)	18.75"(470)	7.25" (182)	2.13"(53)	19.5" (487)	7.75" (192)	2.13"(53)
4" (100)	21.5" (537)	6.63"(168)	2.13"(53)	22.5" (565)	6.88"(175)	2.13"(53)	25" (625)	7.13"(181)	2.13"(53)
6" (150)	26.25" (657)	7.63"(194)	2.13"(53)	27" (675)	8.13"(206)	2.13"(53)	29" (725)	9.13"(232)	2.13"(53)
8" (200)	31.5" (800)	9.75" (245)	2.13"(53)	32.25" (819)	10.25" (255)	2.13"(53)	34.5" (876)	11.25" (282)	2.13"(53)
10" (250)	37.5" (952)	10.25"(255)	2.13"(53)	38.75" (984)	10.75"(270)	2.13"(53)	42" (1067)	12.5"(312)	2.13"(53)
12" (300)	44.5" (1130)	11"(272)	2.13"(53)	45.75" (1161)	11.5"(287)	2.13"(53)	48.25" (1225)	12.75"(320)	2.13"(53)

* **Note:** Final dimensions should be confirmed at time of order.

***Note:** Dimensions are subject to vary at time of manufacturing based on final Beta selected. Dimensional drawing with a final engineering sizing sheet will be provided within 1-2 weeks of order acceptance.

4. Installations

• Flow Run Requirements

The Tek-DPro Cone Meter should be installed with zero to five pipe diameters of straight run upstream of the meter and zero to three pipe diameters downstream. The meter can be used in pipelines that are slightly larger than the meter tube; however, if the meter tube is larger than the pipeline, operators should contact Tek-DPro for installation requirements. This is usually determined before supply according to application and the degree of accuracy and performance required.

• Meter Orientation and Transmitter Position

The Tek-DPro Cone Meter can be installed in a horizontal or vertical position. The location of the transmitter with respect to the meter should be based on the properties of the fluid or gas being measured (gas, steam, liquid, etc.) and the direction of flow through the pipeline.
The direction of flow is clearly labeled on nameplate affixed to the body of every Tek-DPro Cone Meter shipped. The meter must be installed so that the static pressure is always upstream of the differential pressure tap.

• Pressure Tap Location

Location of the static pressure and differential pressure taps will vary with the product flowing through the pipeline (liquid, gas, or steam) and the orientation of the meter (vertical or horizontal).

• For horizontal installations, the following installation guidelines apply:

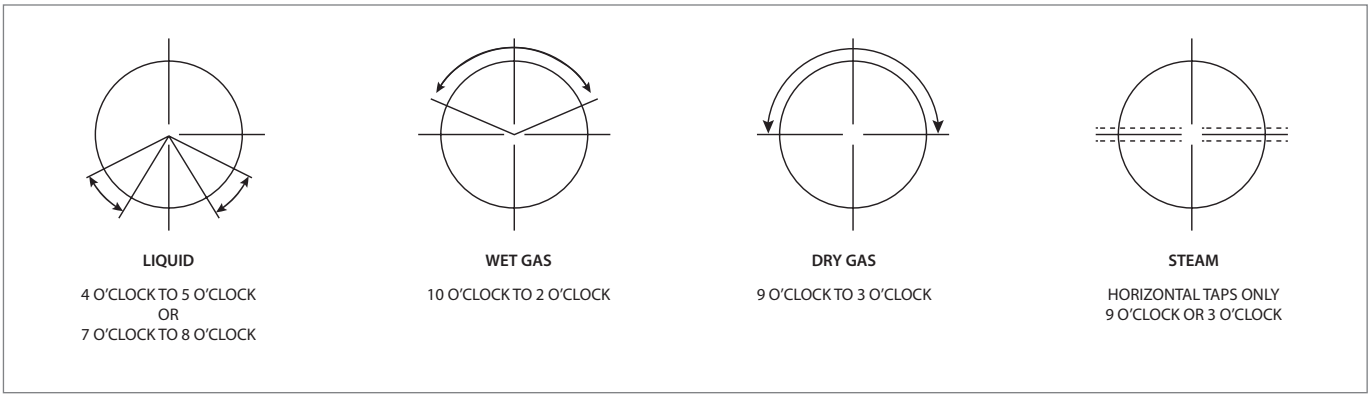

Fig 4: Standard Port Location for Horizontal Installation

Liquid Service Meter Installation

Meter Orientation

Tek-DPro Cone Meters can be installed both in a horizontal or vertical position.
Horizontal Installations are is the standard orientation, however where space is very limited, a vertical position may prove to be the best option.

Pipe Orientation

The orientation of piping is dictated by the position of the meter, the type of product being measured, and for vertical meter installations, the direction of flow. When a vertical piping system is used, the operator must give special consideration to the piping configuration to prevent gas from being trapped in liquid differential pressure lines.

Wall Taps

In extremely cold environments where there is a risk of product freezing in the process lines, the low-pressure sensing port connected to the cone meter can become plugged with ice for such installations, a downstream wall tap may be installed in the meter and should be used measure the downstream differential pressure value. (Note this has to be installed during manufacturing and selected as an option before supply).

This option will allow ice /hydrate blockage to be removed without removing the meter from the meter run, but the meter run must be isolated and depressurized before attempting to clean out the blockage refer to earlier sections regarding this aspect.

Condensate Chamber or Drip Pot

Condensate chamber (drip pot) is a collection vessel recommended in certain standards to avoid gas bubbles in liquid instrument tubing. It should be mounted at the highest point in the impulse tubing between the cone meter and the DP transmitter.

Horizontal Installation for Liquids

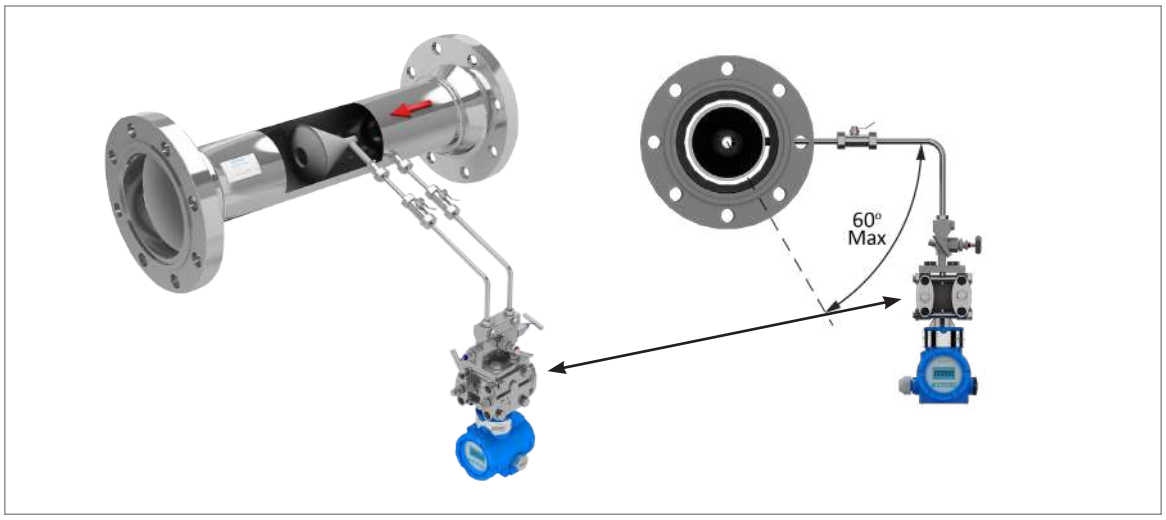

Fig 5. Installation - Liquid measurement (Horizontal Cone Meter)

Vertical Installation for liquids

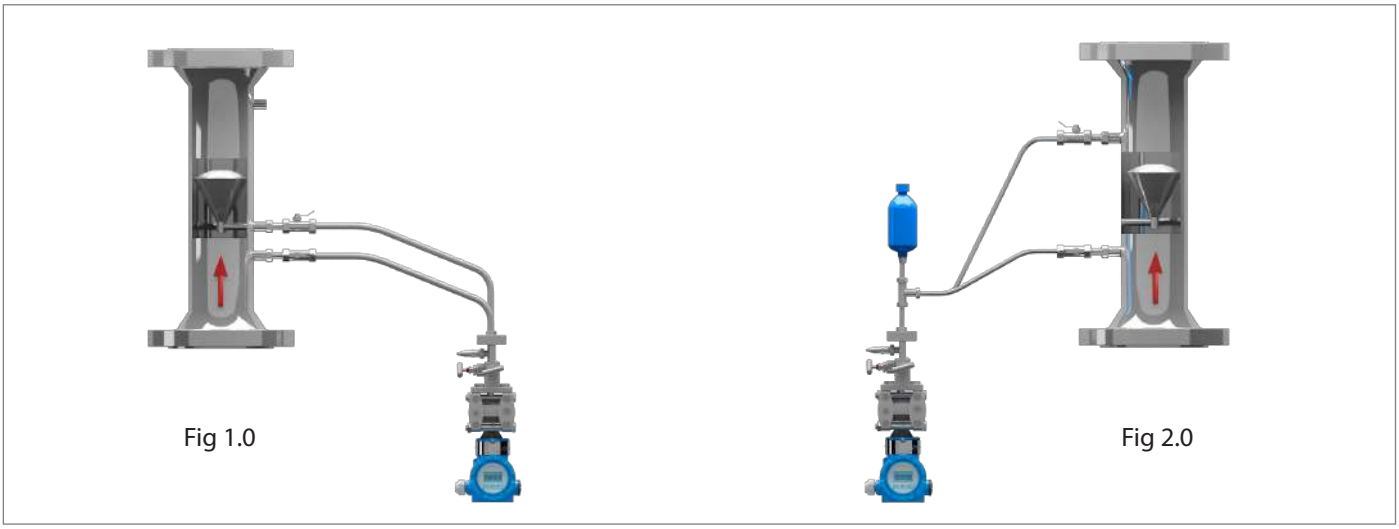

Fig 6: Installation suggestion for upward flowing condition - Cone Meter with Vertical Orientation

Horizontal Meter Installation for Wet Gas

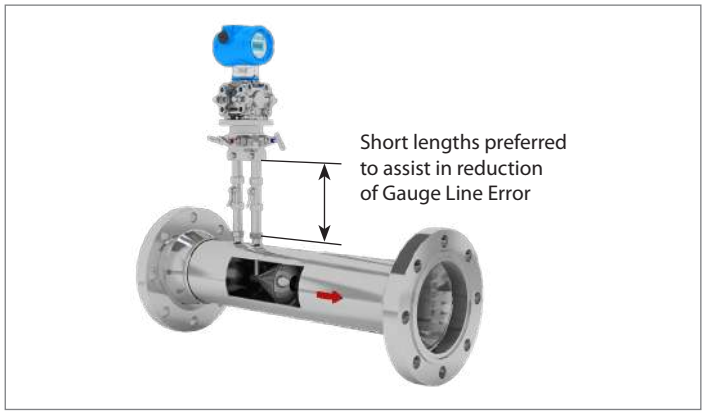

Fig 7: 12 o' clock position (preferred)

Fig 8: 3 o' clock position

• Cone Meter Installation - Hot Gases / Steam

The most difficult application for a differential pressure measurement is steam or hot gasses. This installation requires careful consideration regarding the transmitter tubing. Steam /Hot Gases are usually at a temperature which can damage a DP transmitter and may not be single phase due to temperature change at the tubing due to various factors (Insulation failure, Joules Thompson effects, Phase envelope etc.) Liquid or gaseous phases can ensue depending on both temperature and pressure /environmental conditions. Differential pressure impulse tubing must be orientated in such a manner that it can operate with a gas or liquid present which requires some initial review of the intended install.

Orientation

All Tek-DPro Cone Meters can be installed in a horizontal or vertical position. Horizontal is the standard orientation, however where space is very limited, a vertical position may prove to be the best option taking into consideration the previous suggestions in earlier paragraphs.

Sensing /Impulse Tubing Orientation

The installation /position of the DP impulse tubing is determined by the orientation of the meter, also the type and quality of the Steam/Hot Gas to be measured. For vertical meter installations, the flow direction is also a factor. When a vertical meter run is to be used, operators/ system designers should give special consideration to the impulse tubing configuration to prevent liquid from being trapped and thus cause incorrect measurement readings.

Condensate Chambers

Condensate chambers are installed to provide a liquid reservoir / buffer that helps to prevent super-heated steam from entering a differential pressure transmitter and causing overheating of the electronics. In most cases, a large-diameter tee is only required to collect the liquid.However, if the DP is being read by using a chart recorder, a larger volume condensate chamber reservoir will be needed to prevent heat issues. Modern DP / smart transmitters have smaller diaphragm movements and do not need large condensate chamber volumes.

Horizontal Service Applications – Steam / Hot Gases

Fig 9: Horizontal Application DP Transmitter

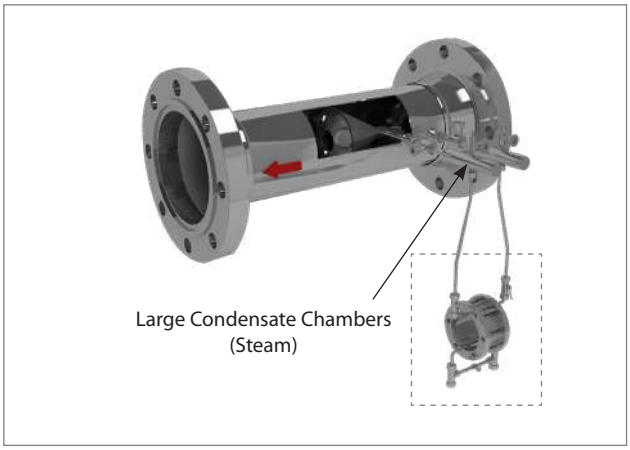

Fig 10: Horizontal Application DP Transmitter

• for Gases

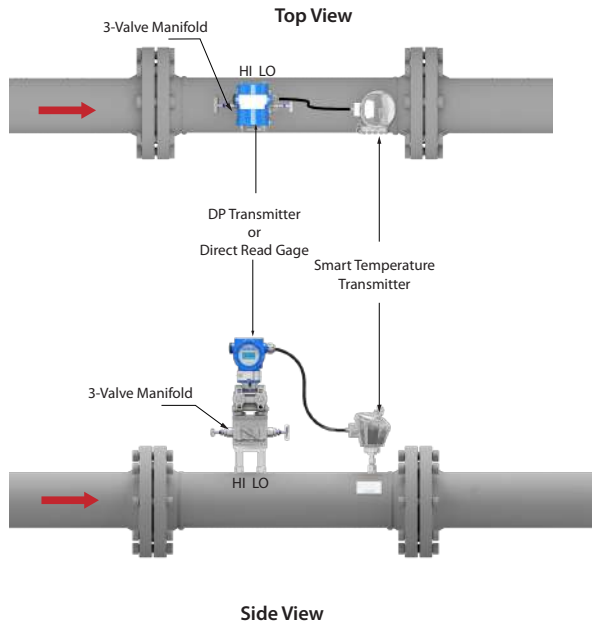

Fig 11: Horizontal Installation for Gases

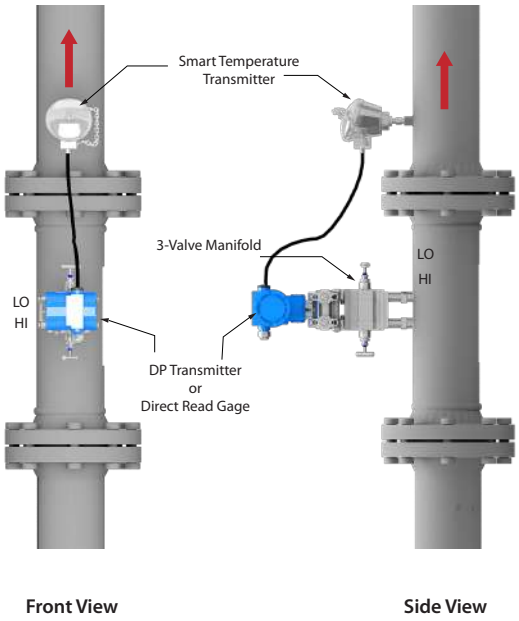

Fig 12: Vertical Installation for Gases

• For Liquid

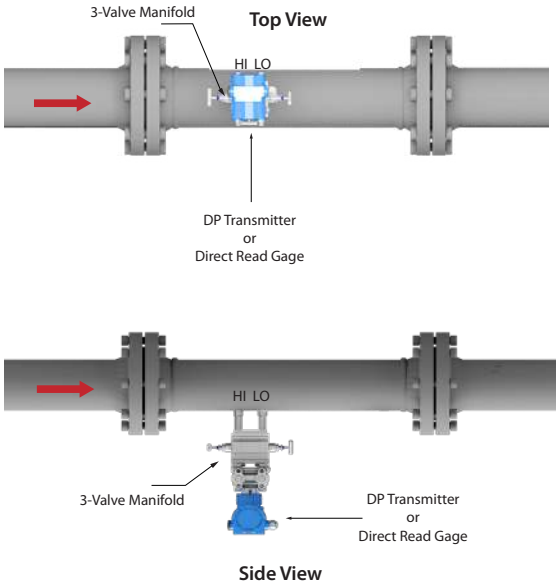

Front View

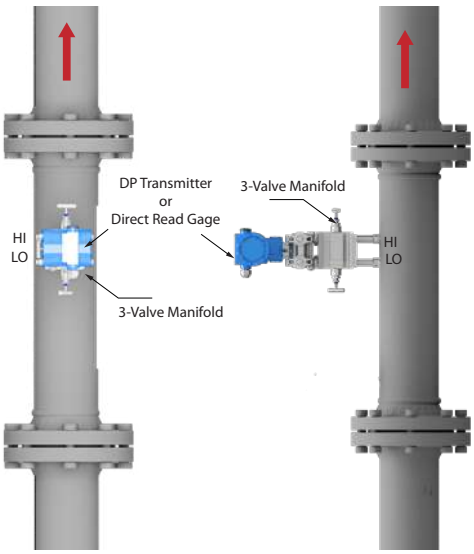

Fig 13: Horizontal Installation for Liquid

Fig 14: Vertical Installation for Liquid

- ## For Steam

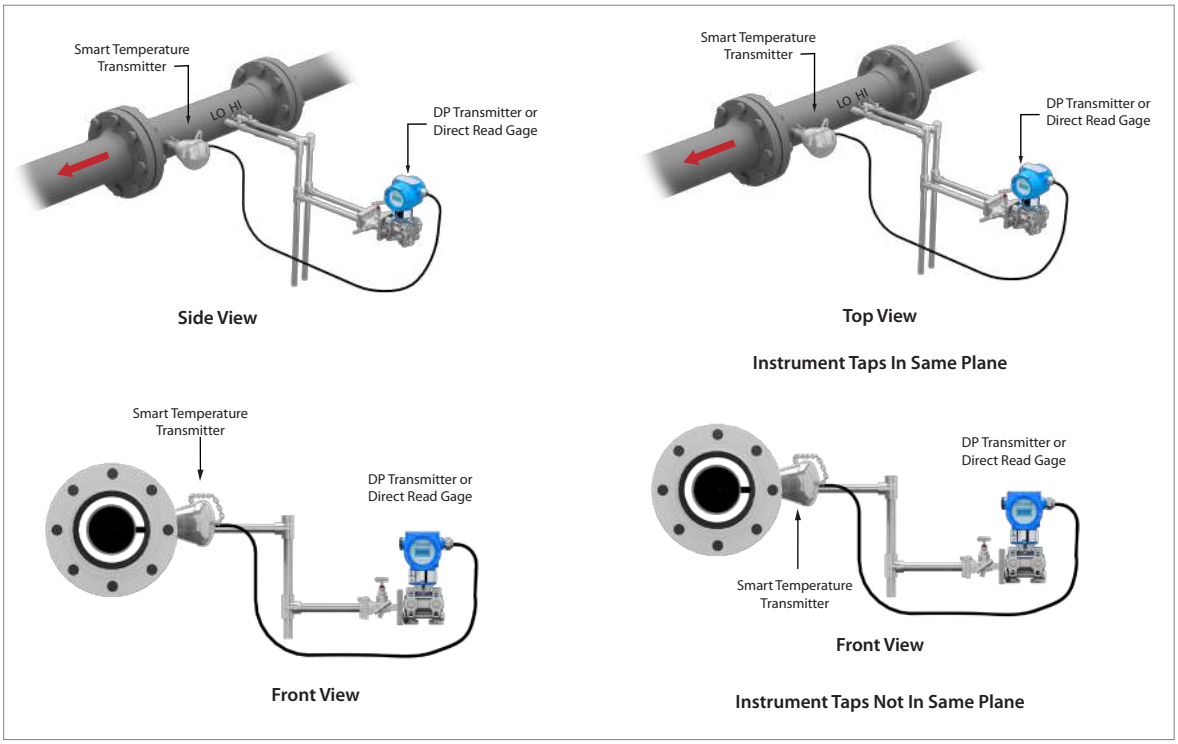

Fig 15: Horizontal Installation for Steam

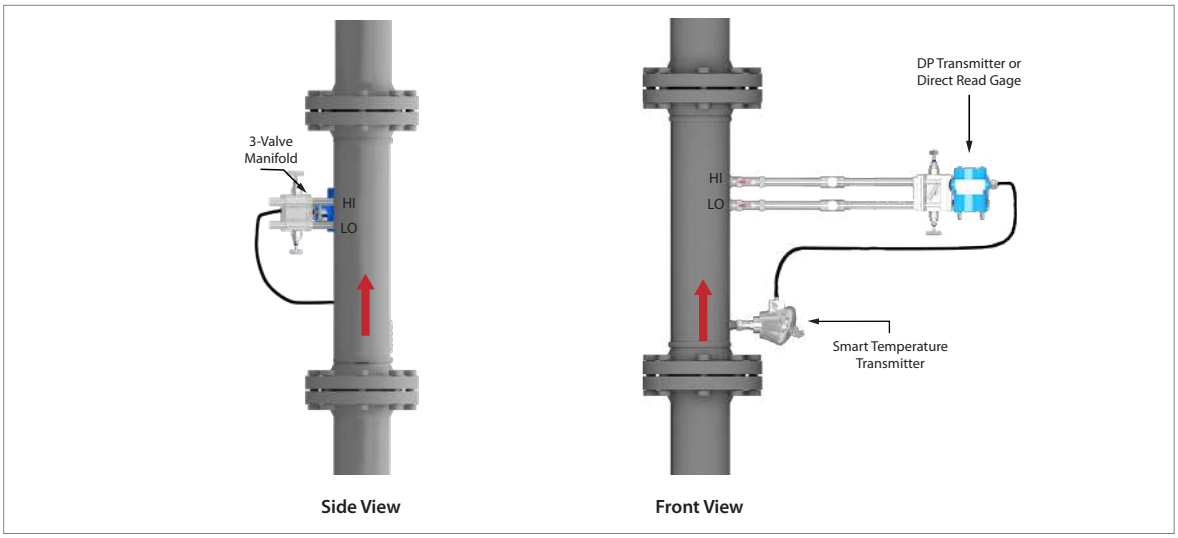

Fig 16: Vertical Installation for Steam

• Installation for Upstream and Downstream

- In most of the flow elements, the proper operation and performance depend on unrestricted upstream and downstream piping length requirements.
- The fully developed symmetrical flow profile is achieved with relatively short upstream and downstream lengths.
- Therefore, it needs minimal upstream and downstream straight pipe runs. The Cone meter can be installed with O to 5D and O to 3D downstream.

Note: *UL= Upstream* *DL = Downstream* *0 = NR*

		0.4	0.5	0.6	0.7	0.8
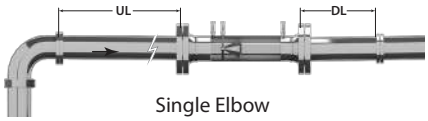 Single Elbow	UL	0	0	0	1D	1D
	DL	0	0	0	1D	1D
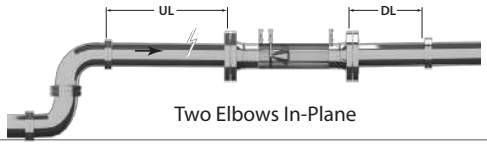 Two Elbows In-Plane	UL	0	0	0	1D	1D
	DL	0	0	0	1D	1D
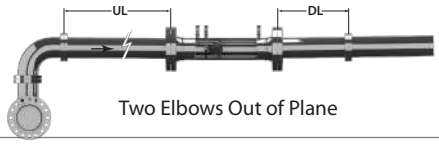 Two Elbows Out of Plane	UL	0	0	0	1D	1D
	DL	0	0	0	1D	1D
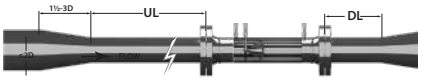 Pipe Reduction	UL	1D	1D	1D	2D	2D
	DL	1D	1D	1D	2D	2D
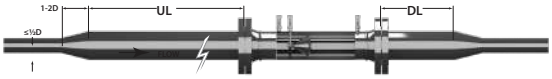 Pipe Enlargement	UL	1D	1D	1D	2D	2D
	DL	1D	1D	1D	2D	2D
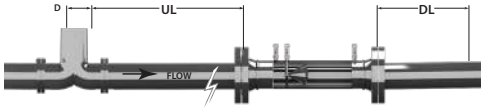 Pipe with Tee	UL	0	0	0	1D	1D
	DL	0	0	0	1D	1D
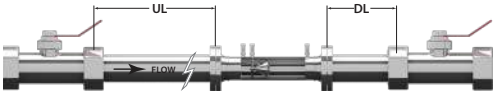 Gate/Globe Valve Fully Open/Partially Open	UL	3D	3D	3D	4D	4D
	DL	0	0	0	1D	1D
	UL	3D	3D	3D	4D	4D
	DL	3D	3D	3D	4D	4D

5. Maintenance

- There should be no need for periodic maintenance or re-calibration if the meter is installed correctly.
- In extreme process conditions, periodically inspect the Tek-DP 1620A DP Cone Meter for any significant physical damage.
- Calibrate and maintain secondary and tertiary instrumentation according to the manufacturer's instructions.

6. Troubleshooting

This section provides troubleshooting techniques for most common operating problems shown in table 1.

Table 1: Troubleshooting Technique

Symptoms	Area	Possible Problem or Solution
No Signal (0mA)	Transmitter	• No Power to transmitter. • Transmitter not wired correctly. • Check continuity on wiring or loose connection.
Negative Signal (<0mA)	Transmitter	Transmitter wires are reversed.
Low signal (<4mA)	Tek-DP 1620A	• Cone Meter is installed backwards, with gauge lines attached as marked. • In this case, the high pressure tap would be sensing a lower pressure than the low pressure tap. • This negative DP would force the signal below 4 mA.
	Gauge Line	• Gauge lines are reversed. Transmitter shows more pressure on lower side than higher side. • Check "H" and "L" marks on DP Cone Meter.
Zero Signal (4mA)	Tek-DP 1620A	• Meter has been damaged. • Remove and visually inspect meter. • No flow in pipeline. • Check other system locations to verify flow through the meter. • The meter could be under pressure but still have no flow.
	Manifold	• Manifold / gauge lines closed or blocked. • Ensure valves and lines are open. • If fluid is safe, open vent valves on transmitter to verify pressure in the gauge lines.

Wrong Signal High or Low	Tek-DP 1620A	• Process conditions do not match actual conditions. • Contact Tek-Trol or your sales representative to recalculate using the correct process conditions. • Wrong meter. • Verify serial numbers on meters to ensure correct specifications. • Sometimes two meters are interchanged. Remember each DP Cone Meter has a unique flow coefficient.
	Gauge Lines	• Foreign material trapped in gauge lines. Dirt and sediment can settle into the gauge lines. If the fluid is safe, vent the gauge lines and inspect for spurts of solids, gasses, or liquids (whichever should not be there). • If the fluid is not safe, open the center manifold valve for several minutes under high DP. Close the valve and compare the signal level to before readings. • In a horizontal, liquid application, install the meter with the taps on the sides of the pipe (3 or 9 o'clock). For a horizontal, gas application, install at top or sides of the pipe (12, 3, or 9 o'clock).
	Flow Computer	• Flow calculations have an error. • Use loop calibrator and apply 4, 12, and 20 mA to computer / system. • Each of these points should be correlate with the DP Cone Meter sizing information. • Current output signal is read incorrectly. • Apply a known current to the loop and read the raw signal in the computer. • Most computers allow the user to see the mA signal directly.
Unsteady Signal	Tek-DP 1620A	• Partially full pipe occurring (liquids only). • Periods with a partially full pipe will cause wrong readings. See above for details.
Slow response time	Transmitter	Dampening.
Sudden change in readings	Tek-DP 1620A	• Foreign object lodged in meter. • This will increase the restriction of the meter and raise the DP. • Remove the meter for visual inspection.
	Gauge Lines	Possibility of leakage within the line.

Signal Very High	Tek-DP 1620A	• Meter body, near the pressure taps.
		• If any arrow is not visible and the meter is large than 2", the flow direction can be determined by the location of the pressure taps.
		• The pressure taps will be closer to the upstream side.
		• On meters less than 2", the gauge lines will need to be removed. Look at the base of both pressure taps. One tap will be smooth at the base, the other will be mostly weld material.
		• The smooth tap is on the upstream side.
		• Flow is going in the opposite direction from what was expected. The assumption of flow direction is sometimes wrong.
		• Verify with other system readings.
		• With a meter measuring backward flow, the DP signal will be approximately 30% high.
		• Partially full pipe (liquids only). A partially full pipe will cause the meter to read very high value. This can happen even in pressurized systems.
		  o On horizontal pipes: If the fluid is safe, open a pressure tap on the top of the pipe. Air release will indicate partially full pipe.
		  o On vertical pipes: Up flow will guarantee a full pipe. Down flow is difficult to diagnose if the pipe is full.
		• Foreign object lodged in meter. This will increase the restriction of the meter and raise the DP. Remove the meter and visually inspect.

	Gauge Lines	• Leak on low pressure gauge line. • Perform a leak check from the meter to the transmitter.
	Transmitter	• Leak on low pressure vent valve. Perform a leak check on valve. • Zero point has shifted positively. This will cause errors more pronounced at the low end of the transmitter range. • Verify by closing the manifold side valves and opening the center valve. The reading should go to zero (4 mA). • Recalibrate if necessary. DP span is set very low. • Use pressure calibrator or handheld communicator to verify span point.

	Flow Computer	• 4 mA set to minimum flow. • Our calculations assume that 4 mA will be equal to zero flow. Sometimes 4 mA is set to equal the minimum flow on the sizing page. • This error will be zero at maximum flow and increase as the flow decreases. • The amount of error will depend on the zero offset.
Signal Very Low	Manifold	• Manifold is cross-vented. The center valve must be closed. • To test, close the two side valves and watch the transmitter signal. • If the signal goes to zero (4 mA), the center valve is not closed completely.
	Gauge lines	• Leak on high pressure gauge line. • Perform a leak check from the meter to the transmitter.

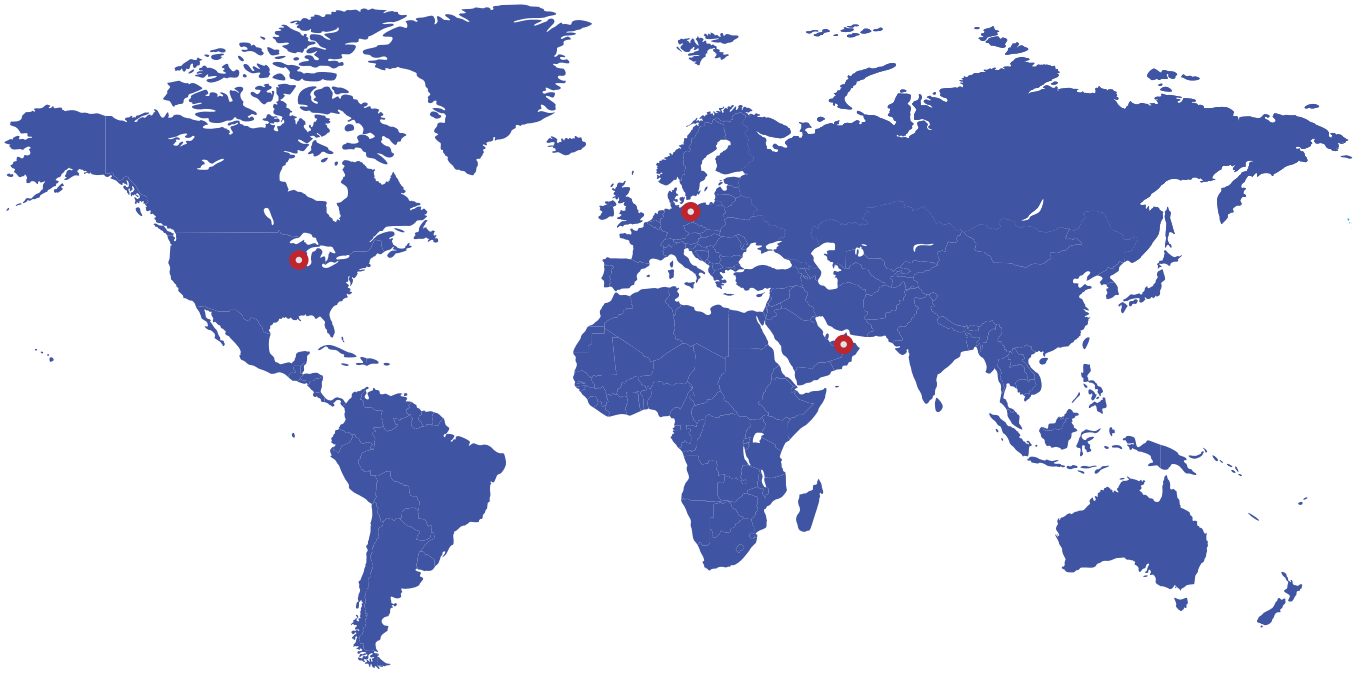

Tek-Trol LLC

796 Tek Drive Crystal Lake, IL
60014, USA
Sales: +1 847-857-6076

Tek-Trol Solutions BV

Florijnstraat 18, 4879 AH
Etten-Leur, Netherlands
Sales: +31 76-2031908

Tek-Trol Middle East FZE

SAIF Zone, Y1-067, PO BOX No.
21125, Sharjah, UAE
Sales: +971-6526-8344

Support: +1 847-857-6076 | Email: tektrol@tek-trol.com | www.tek-trol.com

Tek-DP 1620A