Technology Solutions

TEK-CLAMP 1200A-100H

Handheld Ultrasonic Flow Meter

Instruction Manual

Document Number: IM-1200A-100H

www.tek-trol.com

www.tek-trol.com

NOTICE

Read this manual before working with the product. For personal and system safety, and for optimum product performance, make sure you thoroughly understand the contents before installing, using, or maintaining this product.

For technical assistance, contact
Customer Support
796 Tek-Drive
Crystal Lake, IL 60014
USA
Tel: +1 847 857 6076, +1 847 655 7428

© COPYRIGHT Tek-Trol LLC 2020

No part of this publication may be copied or distributed, transmitted, transcribed, stored in a retrieval system, or translated into any human or computer language, in any form or by any means, electronic, mechanical, manual, or otherwise, or disclosed to third parties without the express written permission. The information contained in this manual is subject to change without notice.

Table of Contents

1 Safety Instructions 2
1.1 Intended Use 2
1.2 Safety Instructions from the Manufacturer 2
1.2.1 Disclaimer 2
1.2.2 Product Liability and Warranty 2
1.2.3 Information Concerning the Documentation 2
1.2.4 Safety Precautions 2
1.2.5 Packaging, Transportation and Storage 3
1.2.5.1 Packaging The original package consists of 3
1.2.6 Transportation 4

2 Product Description 5
2.1 Introduction 5
2.2 Measuring Principle 5
2.3 Specifications 6
2.4 Dimensional Drawings 7

3 Installation 8
3.1 Correct Mounting Point 8
3.1.1 Clamp on Transducer: 8
3.1.2 Clamp on mounting bracket transducer 9
3.2 Requirements for Measuring Flow meter Accuracy 9
3.3 Installation Condition 10
3.3.1 V-method Installation: 10
3.3.2 Z-method Installation 10
3.3.3 W-method Installation 11

4 Electrical Installations 12
4.1 Signal Strength 13
4.1.1 Signal Quality 13
4.2 Transmitter Connections 14
4.2.1 Basic Circuit of the Transmitter 14
4.3 Digital Output 14
4.3.1 The Connection of Digital Output 14
4.3.2 Keys' Function 14
4.3.3 Menu 15

5 Troubleshooting 17
5.1 No Display 17
5.2 Exciting Alarm 17
5.3 Empty Pipe Alarm 17
5.4 Measure Flow Disallow 17

1 Safety Instructions

1.1 Intended Use

Tek-Clamp 1200A-100H is a Handheld Ultrasonic Flow Meter are used only for measure the flow of liquids in closed pipes, e.g.: Clean water, wastewater etc.
The manufacturer is not liable for damage caused by improper or non-designated use.

1.2 Safety Instructions from the Manufacturer

This meter was calibrated at the factory before shipment. To ensure correct use of the meter, please read this manual thoroughly.

1.2.1 Disclaimer

The manufacturer will not be held accountable for any damage that happens by using its product, including, but not limited to direct, indirect, or incidental and consequential damages. Any product purchased from the manufacturer is warranted in accordance with the relevant product documentation and our Terms and Conditions of Sale.
The manufacturer has the right to modify the content of this document, including the disclaimer, at any time for any reason without prior notice, and will not be answerable in any way for the possible consequence of such changes.

1.2.2 Product Liability and Warranty

The operator shall bear authority for the suitability of the device for the specific application. The manufacturer accepts no liability for the consequences of misuse by the operator. Wrong installation or operation of the devices (systems) will cause the warranty to be void. The respective Terms and Conditions of Sale, which forms the basis for the sales contract shall also apply.

1.2.3 Information Concerning the Documentation

To prevent any injury to the operator or damage to the device it is essential to read the information in this document and the applicable national standard safety instructions. This operating manual contain all the information that is required in various stages, such as product identification, incoming acceptance and storage, mounting, connection, operation and commissioning, troubleshooting, maintenance, and disposal.

1.2.4 Safety Precautions

You must read these instructions carefully prior to installing and commissioning the device. These instructions are an important part of the product and must be kept for future reference. Only by observing these instructions, optimum protection of both personnel and the environment, as well as safe and fault-free operation of the device can be ensured.

Warnings and Symbols Used

The following safety symbol marks are used in this operation manual and on the instrument.

WARNING

Indicates a potentially hazardous situation which, if not avoided, could result in death or serious injury.

CAUTION

Indicates a potentially hazardous situation which, if not avoided, may result in minor or moderate injury. It may also be used to alert against unsafe practices.

NOTE

Indicates that operating the hardware or software in this manner may damage it or lead to system failure.

1.2.5 Packaging, Transportation and Storage

1.2.5.1 Packaging The original package consists of

1. Tek-Clamp 1200A-100H Handheld Ultrasonic Flow Meter
2. Documentation

NOTE

Unpack and check the contents for damages or signs of rough handling. Report damage to the manufacturer immediately. Check the contents against the packing list provided.

1.2.6 Transportation

- Avoid impact shocks to the device and prevent it from getting wet during transportation.
- Verify local safety regulations, directives, and company procedures with respect to hoisting, rigging, and transportation of heavy equipment.
- Transport the product to the installation site using the original manufacturer's packing whenever possible. 1.4.3 Storage the Tek-Clamp 1200A-100H is designed for installation and usage purpose in typical commercial/industrial environments. The following considerations must be observed in selecting a location for the meter:
- The ambient operating temperature range is -22°F (-30°C) to 176°F (80°C).
- Do not expose the meter to corrosive liquids or fumes.
- Avoid installation locations that are close to strong sources of electrical interference.
- Avoid installing the electronics enclosure in direct sunlight.
- Avoid installation locations where the transducers will be exposed to vibrations in the piping system.
- Always run transducer cables in a dedicated conduit separate from signal and power cables.
- Allow sufficient space for daily inspection, wiring, etc.
- Avoid installing the meter at a place subjected to, or at risk of, flooding.

2 Product Description

This section covers the reference and specification data, as well as ordering information.

2.1 Introduction

Tek-Clamp 1200A-100H Handheld Ultrasonic Flow Meter is a completely non-invasive Ultrasonic Flow Meter. The flow meter uses the ultrasonic signal to measure the flow rates with the transit time method. It consists of the built-in data logger for over 2000 lines of data and is optional as an external data logger. Tek-Clamp 1200A-100H has a pair of transducers capable of measuring flow rates in pipes from 1/2" (12.5 mm) to 28" (700 mm) at temperatures of between 32 °F (0 °C) to 320 °F (160 °C). This flow meter can be virtually applied to a wide range of measurements. A variety of liquid applications contain potable water, cooling water, river water, raw sewage, reclaimed water, plant effluent, ultra-pure liquids, chemicals.

2.2 Measuring Principle

When the ultrasonic wave is transmitted through the flowing liquid, the difference between the upstream and downstream transit time (travel time or time of flight) can be calculated, which is proportional to flow velocity.

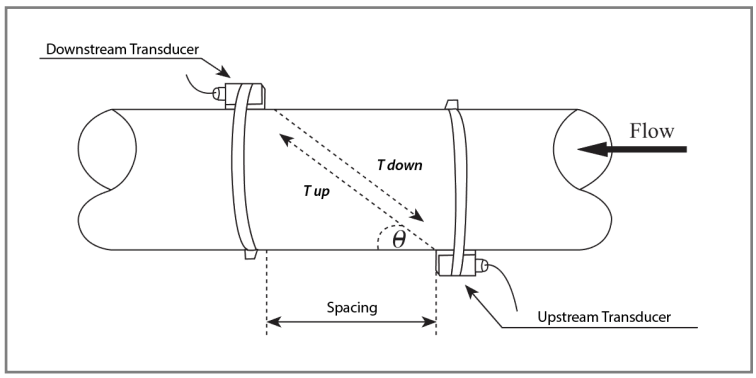

Fig 1: Tek-Clamp 1200A-100H Handheld Ultrasonic Flow Meter

The formula for calculating velocity is:

$$V = \frac{MD}{\sin 20} \times \frac{\Delta T}{T_{up} \times T_{down}}$$

Where,

0: Includes angle to the flow direction

M: Travel times of the ultrasonic beam

D: Pipe diameter

T_{up} : Time for the beam from upstream transducer to the downstream one

T_{down} : Time for the beam from downstream transducer to the upstream one

ΔT=T_{up}- T_{down}

2.3 Specifications

Accuracy		±1% of reading at rates >0.2 mps
Velocity		0.03 to 100ft/sec
Repeatability		0.2%
Measurement Period		0-999 seconds, user-configurable
Measurement Principle		Transit Time Ultrasonic Flow Meter
Weight		Portable transmitter weight 514g Package with accessories weight 6kg Volume weight for whole package 12kg
Power	**100H**	3 AAA built-in Ni-MH batteries 1.2V (for over 12 hours of operation) 90V-260V AC adapter
Power Consumption		1.5W
Environment Temperature		Convertor: -4°F to 140 °F (-20 to 60°C) Flow Transducer: -22°F to 320°F (-30 to 160°C)
Environment Humidity		Convertor: 85% RH
Protection Class		Flow Transducer: IP67
Clamp-On		HS-type: for pipe size ½"- 4" (12.5mm -100 mm) HM-type: for pipe size 2"- 28" (50mm- 700 mm) Other pipe size available on request
Types		Following Liquids transmit sound wave: • Single liquid such as, Water (Hot water, Chilled water, City Water, Sea Water, Wastewater, etc.) • Sewage with small particle content • Oil (crude oil, lubricating oil, diesel oil, fuel oil, etc.) • Chemicals (alcohol, etc.) • Plant Effluent • Beverage • Ultra-pure liquids
Process Temperature		-22°F to 320°F (-30°C to 160°C)
Pipe Material		Steel, Stainless Steel, Cast Iron, Copper, Cement Pipe, PVC, Aluminum, Glass Steel Product, Liner is allowed
Pipe Size		1/2" to 28"
Pipe Straight Run		Transducer installation should be satisfied: upstream10D, downstream 5D, 30D from the pump
Dimensions		8”X 3¾” X 1¼” (200 X 93 X 32mm) (Convertor)

2.4 Dimensional Drawings

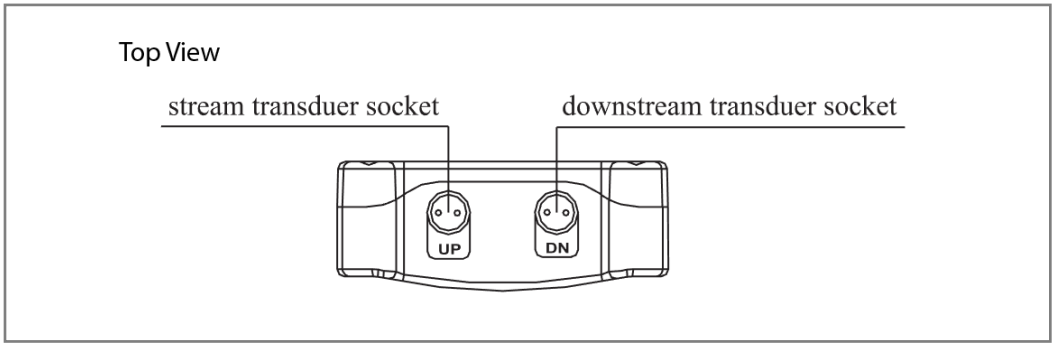

Fig 2: Top View of 1200A-100H Handheld Ultrasonic Flow Meter

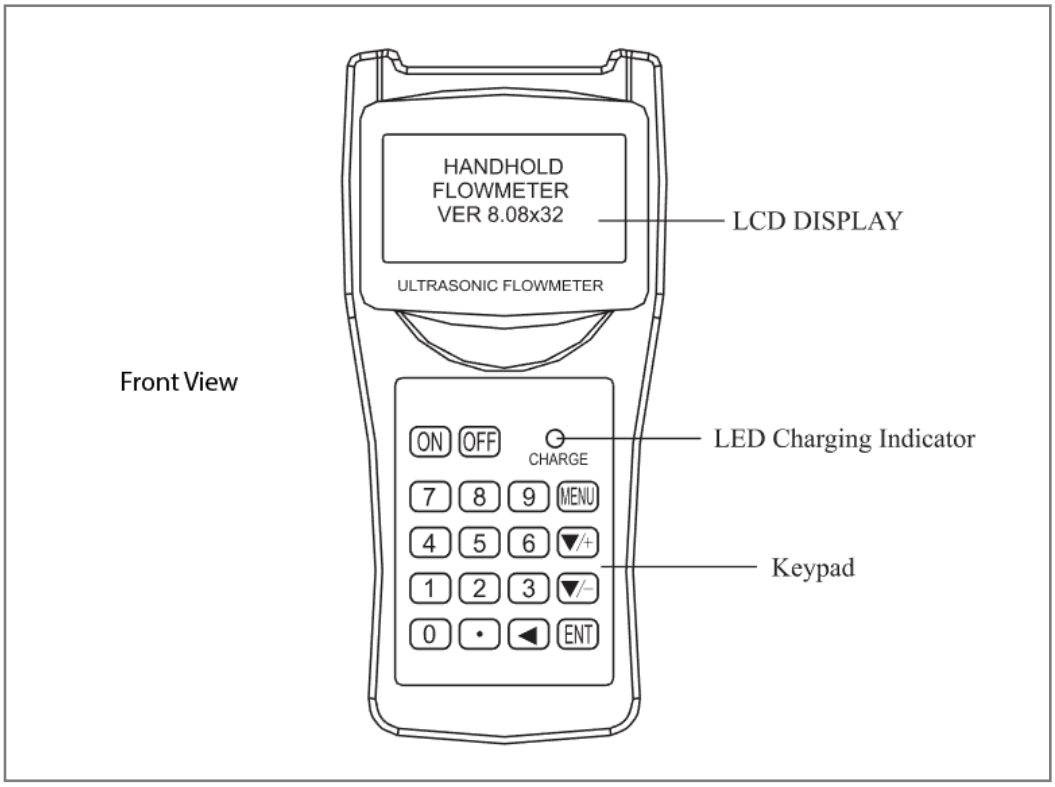

Fig 3: Front View of 1200A-100H Handheld Ultrasonic Flow Meter

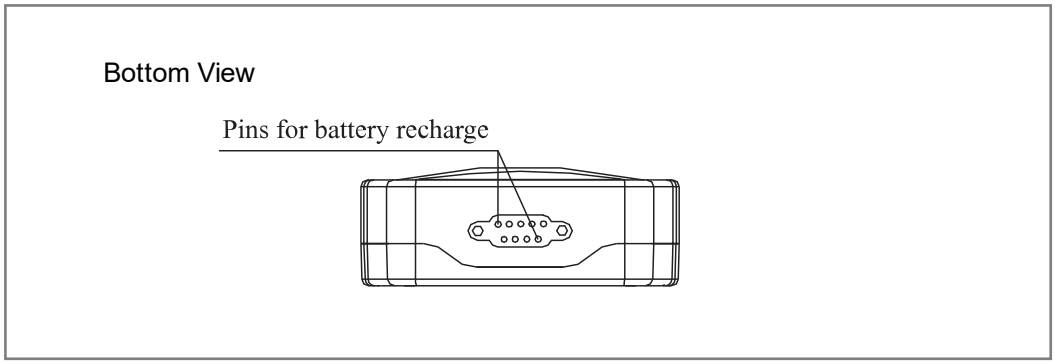

Fig 4: Bottom View of 1200A-100H Handheld Ultrasonic Flow Meter

3 Installation

This section covers instructions on installation and commissioning. Installation of the device must be carried out by trained; qualified specialists authorized to perform such works.

CAUTION

- When removing the instrument from hazardous processes, avoid direct contact with the fluid and the meter
- All installation must comply with local installation requirements and local electrical code

3.1 Correct Mounting Point

The correct mounting point is a major factor for the installation of a flow Meter. Installation at wrong point may influence measuring accuracy or flow meter service life, or even damage the flow meter.
The axis for measuring electrode shall be approximate to horizontal direction.

Tek-Clamp 1200A-100H Handheld Ultrasonic Flow Meter can simplify the ultrasonic flow meter installation process, by shortening installation time and improving installation accuracy. Tek-Clamp 1200A-100H Handheld Ultrasonic Flow Meter installed by two methods:

3.1.1 Clamp on Transducer:

Install the Tek-Clamp 1200A - 100H Handheld Ultrasonic Flow Meter (with magnet) on the pipe. It can help finish the flow measurement without any pressure drop. The need for cutting the pipe is eliminated.

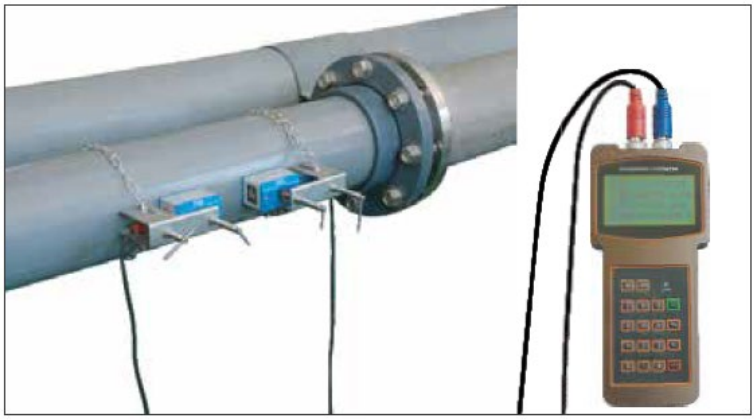

Fig 5: Tek-Clamp 1200A-100H Handheld Ultrasonic Flow Meter

3.1.2 Clamp on mounting bracket transducer

- Install Tek-Clamp 1200A - 100H on the pipe, to finish the flow measurement. The need for cutting pipe gets eliminated.
- Several types of bracket Tek-Clamp 1200A - 100H are used to measure pipe size from 1/2” to 28”.
- Several types of bracket Tek-Clamp 1200A - 100H are used to measure temperature range from -22°F to 320°F (-30°C to 160°C)

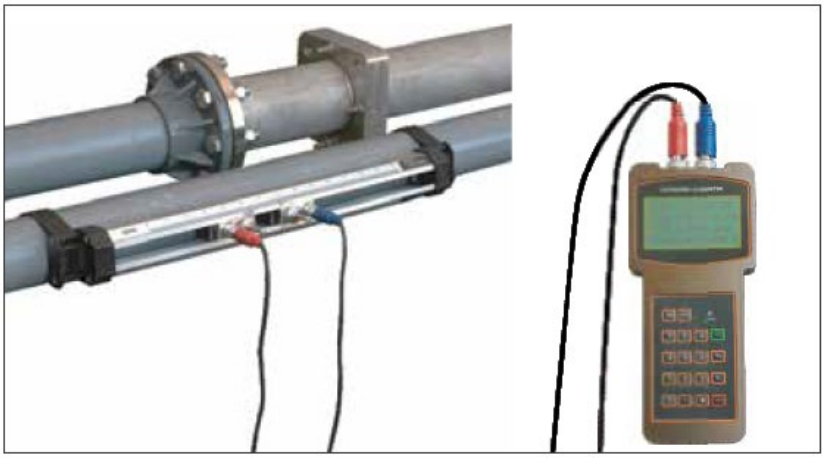

Fig 6: Tek-Clamp 1200A-100H Handheld Ultrasonic Clamp-on mounting bracket transducer

3.2 Requirements for Measuring Flow meter Accuracy

- Medium must be conductive.
- The pipe should be completely filled with the medium.
- Medium conductivity should be homogeneous to avoid severe disruption. If chemical substances need be injected into the pipe, the injection should be operated at upstream side of flow meter.
- Magnetic flow meter system should be connected to the ground.
- There must be a straight pipe run no less than 5DN at flow meter upstream and 2DN at flow meter downstream. (DN is the internal diameter of the pipeline).
- Do not install the flow meter near large electrical machine or transformer in order to avoid the electromagnetic interference.

NOTE

Do not expose the electronic unit box to direct sunlight; in case of outdoor installation, use a suitable protection shield.

3.3 Installation Condition

3.3.1 V-method Installation:

V-method installation is the most widely mode for daily measurement with pipe inner diameters ranging from 15 mm to 400 mm (½" to 16”). It is also called reflective mode.

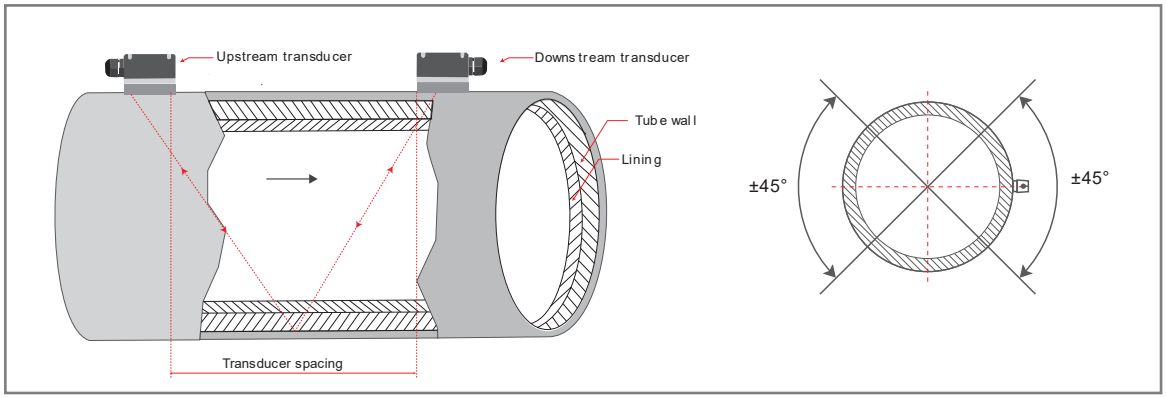

Fig 7: V-method Installation

3.3.2 Z-method Installation

Z-method is commonly used when the pipe diameter is above 8” (200mm).

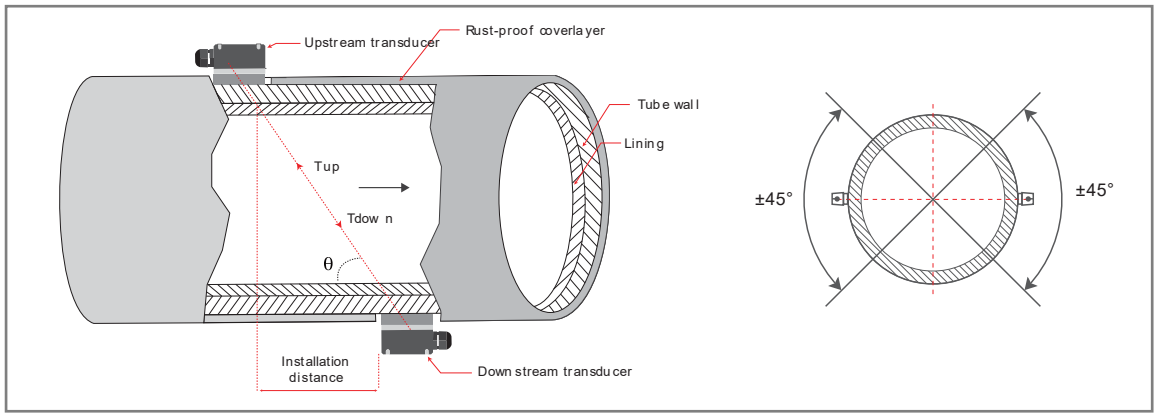

Fig 8: Z-method Installation

3.3.3 W-method Installation

W-method is usually used on plastic pipes with a diameter from 2” (15mm to 50mm).

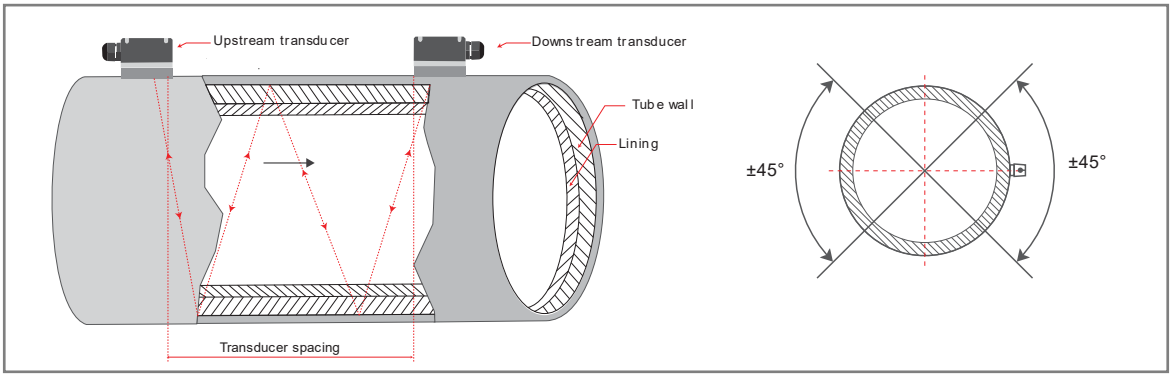

Fig 9: W-method Installation

4.1 Signal Strength

- Signal strength indicates the amplitude of receiving ultrasonic signals by a 3-digit number. [000] means there is no signal detected and [999] refers to the maximum signal strength that can be received.

  The following methods are recommended to obtain stronger signals:
- Relocate a more favourable location, if the current location is not good enough for a stable and reliable flow reading, or if the signal strength is lower than 700.
  Try to polish the outer surface of the pipe and apply more coupler to increase the signal strength.
- Adjust the transducers both vertically and horizontally while checking the varying signal strength, stop at the highest position, and then check the spacing of the transducers to make sure the spacing of the transducers.

4.1.1 Signal Quality

Signal quality is indicated by the Q value in the instrument. A higher Q value means high signal to noise ratio (SNR), which provide higher degree of accuracy in measurement.
Under normal pipe condition, the Q value is in the range between 600-900, the higher the better.
Disadvantage of lower Q value is as follows:

1) Interference of other instruments and devices such as a powerful transmitter working nearby. Try to relocate the flow meter to a new place where the interference can be minimum. Bad sonic coupling for the transducers with the pipe.
2) Apply more coupler or clean the surface, etc. Pipes are difficult to be measured. Relocation is recommended.

4 Electrical Installations

- Please cut off power supply before connecting the device
- Check the cable model before connecting the cable.
- Follow the procedure for cable into lead collar: -
- At first, loosen the gland nut on lead collar and take off blind, secondly, put gland nut and rubber ring on cable, make the cable through lead collar; finally, straighten out cable, screw gland nut tight to make rubber ring press cable.
- When wire stripping, do not damage insulating layer which should be reserved.

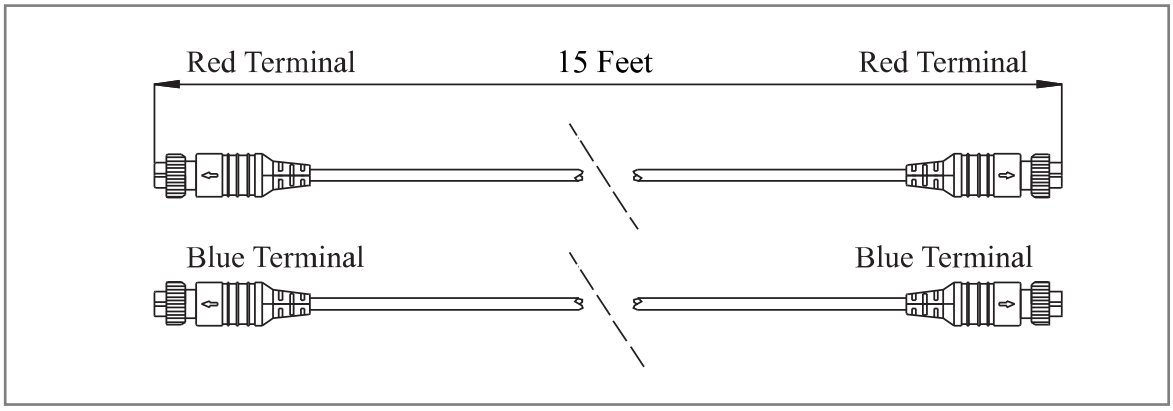

Fig 10: TEK-Clamp 1200A-100H Electrical Connections Cables.

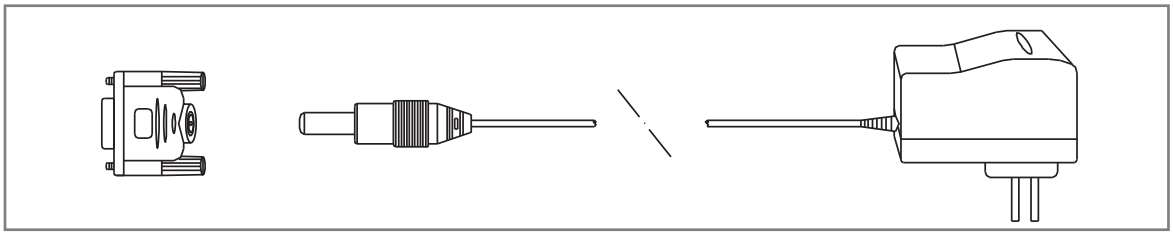

Fig 11: Tek-Clamp 1200A-100H Converted Terminal and AC/DC Adaptor

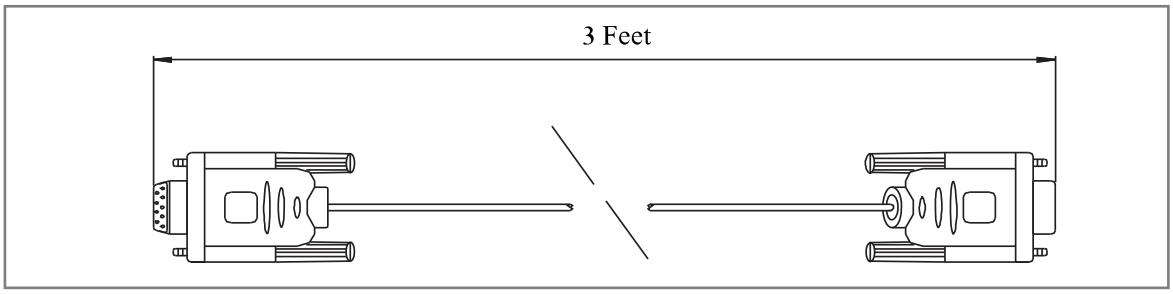

Fig 12: TEK-Clamp 1200A-100H Electrical Connections Cables interface.

4.2 Transmitter Connections

4.2.1 Basic Circuit of the Transmitter

The converter can supply the uncontrollable current to the coil in the sensor of electromagnetic flow meter. The head amplifier amplifies the electromotive force from the sensor and converts it into standard signals of current or frequency so that the signals can be used for displaying, controlling, and processing.

4.3 Digital Output

The transmitter has two output signals i.e., frequency and pulse output. The user can choose only one type of output.

4.3.1 The Connection of Digital Output

Digital output has two connected points i.e., digital output connected point and digital ground point,

CAUTION

- Make sure the sensor connected to the earth.
- Make sure the liquid is still when regulating instruments.
- The electrode and the liquid should be in contact for about 48 hours.

4.3.2 Keys' Function

- Keys' function in self- testing way

"Down" key	Down button cycles through data displayed on lower lines
"Up" key	Up button cycles through data displayed on lower lines
"Enter" key	Press it to come into the interface measuring
"Compound" & "Enter"	To enter parameter setting
Under measurement status, adjustment of the LCD contract	Push "Down" & "Compound" or "Up" & "Compound"

- Push “Down” & “Compound” or “Up” & “Compound”

“Down” key	Subtract 1 from the number above cursor
“Up” key	Plus 1 to the number above cursor
“Compound” & “Down”	To shift cursor to left
“Compound” & “Up”	To shift cursor to right
“Enter” key	To enter or exit the submenu, pressure for more than 2s to exit to measuring status

NOTE

When using the “Compound” key, you should press “Compound” key and “Up” key both or “Compound” key and “Down” key both.
To select the zero correction about the flow directly use “Down” or “Up” to Switch.

To set or correct working parameters, the converter should be running in Parameters Setting Way instead of Measuring Status.

- In Measuring Status, press “Compound” + “Enter” keys getting to the select of parameter and transfer password (0000).
- Correct the password with one of the new passwords that are provided by manufacturer. Finally, press the “Compound” +” Enter” keys to work in Parameters Setting Way.
- There are 6 Passwords in design and among them 4 for deferent operators in secret and 2 are fixed passwords for system operation.

4.3.3 Menu

- Parameters of converters can decide the running status, process and output ways as well as state of output. Correct option and setting of parameters can keep the converters running optimally and get higher accuracies of output bother in display and in measurement.
- There are 6 grades of passwords for setting parameters function. Grades 1 to grade 5 of passwords are for users and grade 6 of password is for manufacturer. Users can reset their passwords of grades 1 to 4 in grade 5.
- Users can check converters parameters in any grade of password. However, if users want to change parameters of converters, deferent grade of parameters have to be used by the users.

Steps to Configure the Parameters

1. Pipe outer diameter.
2. Pipe wall thickness.
3. Pipe materials.

4. Linear material and its sound speed and thickness shows half sentence what any linear.
5. For non-standard liquids, the sound speed of the liquid is also needed.
6. Generally, the Standard M1 clamp-on transducers is selected.
7. Generally, Transducer mounting methods are the V-method or Z-method is the common option.
8. Check the space displayed on M25 and install transducer accordingly.

For standard pipe materials and standard liquids, the following detailed step-by-step setup is recommended.

1. Press keys *MENU* diameter, and then press 11 ***ENT*** to enter M11 window to input the digits for the pipe outer key.
2. Press key ▼/- to enter M12 window to input the digits for the pipe outer diameter and then press ***ENT*** key.
3. Press key▼/- (down) to enter M14 window, and press mode. Use keys ▲/+ (Up) and ▼/- (down) to scroll up and down to the intended pipe material, and then press ***ENT*** .

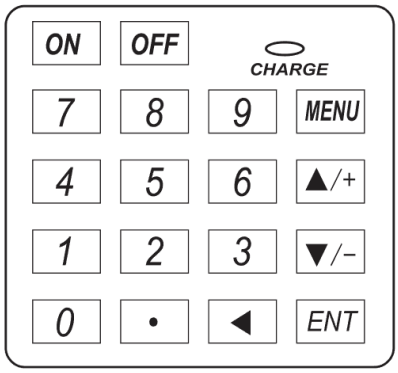

Fig 13: Keypad 1200A-100H

4. Press key ▼/- (down) to enter M16 window, press ***ENT*** key to enter the option selection ***ENT*** key to enter the option selection mode, use keys ▲/+ (Up) and ▼/- (down) to scroll up and down to the liner material, and then press key. Select " No Liner", if there is no liner.
5. Press key ▼/- (down) to enter M20 window, press ***ENT*** key to enter the option selection mode, use keys ▲/+ (Up) and ▼/- (down) to scroll up and down to the proper liquid, and then press ***ENT*** key
6. Press key ▼/- (down) to enter M23 window, press key to enter the option selection mode, ***ENT*** use keys ▲/+ (Up) and ▼/- (down) to scroll up and down to the proper transducer type, and then press ***ENT*** key.
7. Press key ▼/- (down) to enter M24 window, press use keys ▲/+ (Up) and ▼/- (down) to scroll up and down to the proper transducer mounting method, and then press ***ENT*** key
8. Press key ▼/- (down) to enter M24 window to install the transducers on the pipe, and then press key to go to M01 for the results.

5 Troubleshooting

This section provides troubleshooting techniques for most common operating problems.

5.1 No Display

1. Check the power supply connection.
2. Check the power fuse for faults.
3. Check the contrast of LCD and adjust.

5.2 Exciting Alarm

1. Check the connection of the exciting cables.
2. Check the total resistance of sensor's exciting coil resistances (less than 150Ω).
3. If first and second points are OK, then the converter is faulty.

5.3 Empty Pipe Alarm

If measured fluid full of testing pipe of sensor:

1. Short circuit three connectors SIG 1, SIG 2, SGND of converter; if no "Empty Alarm" is displayed then the converter works. In this case, it is possible that the conductivity of measured fluid may be limited or the empty threshold of the empty pipe and the range of the empty pipe are incorrectly set.
2. Check if the signal cable is OK or not.
3. Check if the electro-poles are OK or not.
4. Let the flow be zero, then the displayed conductivity should be less than 100%.
5. Resistances of SIG1 to SGND and SIG2 to SGND are all less than 50kΩ (conductivity of water) during measurement operation. (Resistances should be measured by means of multi-meter with the pointer for a better understanding of charging well.)

5.4 Measure Flow Disallow

If measured fluid full of testing pipe of sensor, check if the signal cable is OK.

TEKMATION LLC reserves the right to change the designs and/or materials of its products without notice. The contents of this publication are the property of TEKMATION and cannot be reproduced by any other party without written permission. All rights reserved. Copyright © 2020 TEKMATION LLC
TEKMATION LLC
DOC#TEK/PO/MNL/20060/1200A-100H/00

www.tek-trol.com

Tek-Trol is a fully owned subsidiary of TEKMATION LLC. We offer our customers a comprehensive range of products and solutions for process, power and oil & gas industries. Tek-Trol provides process measurement and control products for Flow, Level, Temperature & Pressure Measurement, Control Valves & Analyzer systems. We are present in 15 locations globally and are known for our knowledge, innovative solutions, reliable products and global presence.

Tek-Trol LLC
796 Tek Drive Crystal Lake, IL 60014, USA
Sales: +1 847-655-7428

Tek-Trol Solutions BV
Florijnstraat 18, 4879 AH Etten-Leur, Netherlands
Sales: +31 76-2031908

Tek-Trol Middle East FZE
SAIF Zone, Y1-067, PO BOX No. 21125, Sharjah, UAE
Sales: +971-6526-8344

Support: +1 847-857-6076 | Email: tektrol@tek-trol.com | www.tek-trol.com

Flow | Level | Temperature | Pressure | Valves | Analyzers | Accessories | TekValSys