TEKTROL
Technology Solutions

TEK-FLUX 1400A

Electromagnetic Flow Meter

FLOW

www.tek-trol.com

Flow | Level | Temperature | Pressure | Valves | Analyzers | Accessories | TekValSys

Introduction

Electromagnetic flow meters are also called as Magmeters. It is a contact instrument used for measuring the volumetric flow rates of any fluids that can adequately conduct electricity in closed pipelines. These instruments are highly accurate, reliable, and stable devices that are used in various high-pressure industrial processes.

Measuring Principle

The Tek-Flux 1400A flow meter operates on the principle of Faraday's Law of Induction. According to this principle, any change in the magnetic flux linked to an electric circuit causes an electromotive force (or voltage) to be induced in this circuit. The induced voltage is therefore directly proportional to the rate of change of magnetic flux with time.

Operation

The flow meter typically consists of two electromagnetic coils that are mounted on opposite sides of a non-magnetic measuring tube. Two electrodes are fitted inside the tube to detect the voltage generated by the conducting fluid. Although these electrodes come into contact with the fluid, they do not obstruct its flow.

When current is applied to the coils, they generate an alternating magnetic field across the cross-sectional area of the tube. A fluid flowing through the magnetic field acts as a conductor, and a voltage is induced. The induced voltage is picked up by the electrodes and sent to a transmitter that is either mounted on the flow meter or connected remotely. The transmitter calculates the volumetric flow rate and displays the output.

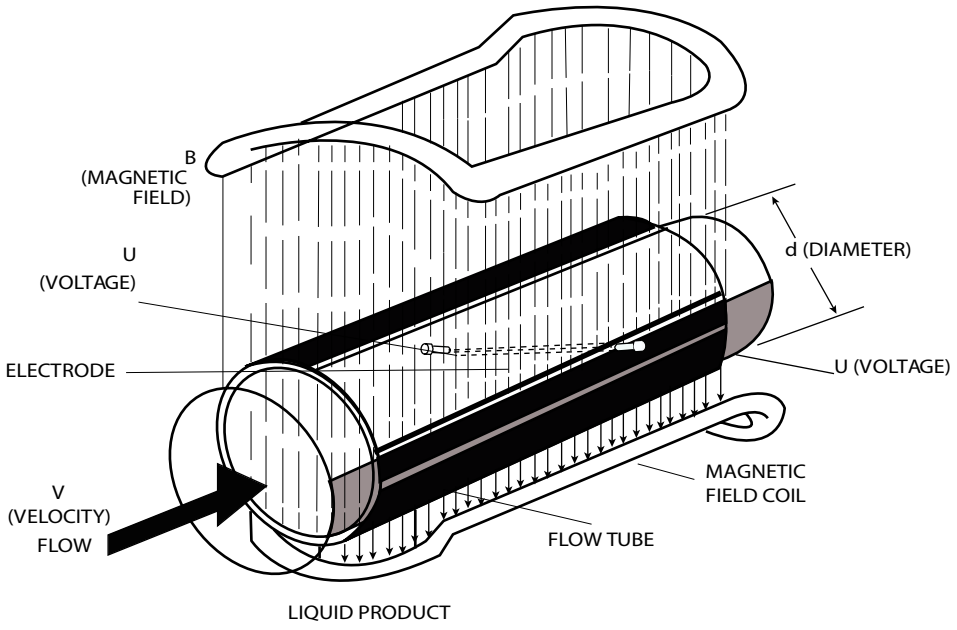

Fig.1 Operation of an Electromagnetic Flow meter

The induced voltage is calculated using the following equation:

$$U = B \times d \times v$$

Where,

U = Voltage Induced by the Conducting Fluid
B = Magnetic Flux Density
d = Distance Between the Electrodes
v = Average Velocity of the Conductor (i.e. fluid flowing in the tube through the magnetic field)

Since the magnetic flux density and the distance between the electrodes remain constant, the induced voltage is directly proportional to the conductor velocity.
The value of the velocity is used to calculate the volumetric flow rate as follows:

$$Q = A \times v$$

Where,
Q = Flow Rate
A= Area
v= Average velocity

Features/Benefits

- Wide range of nominal diameter Size ½" to 28" (0.04 ft to 2.33 ft) with IP65 protection
- Easy maintenance due to no moving parts
- Uninfluenced by temperature, pressure, viscosity, and density
- Used for wide application, can measure conductive fluid, without reference to fibre, solid,or suspending material contained in liquid
- High turndown ratio up to 1:100
- It features high intelligence, with back light LCD display, menu setting control, three grades password protection, two-way measuring, slight signal removal, auto flow compensation, and other function
- Features high intelligence, which ensure empty pipe detection, self-detection, self-diagnostic functions, and safety alarms for upper and lower limit
- Features SMART excitation, which ensures zero-point stability, high reliability, and low power consumption
- Lining and electrode available in various materials which can measure nearly all conductive fluids
- It has multiple signal output, pulse or Modbus RS485 or HART® or 4 to 20 mA
- The power supply system has good voltage vibration ability
- Meters batching and blending totalization

Applications

- It can measure highly corrosive medium such as concentrated acid and concentrated alkaline using PTFE lining material
- By using Hastelloy C electrode we can measure seawater and brine application

Dimensional Drawing

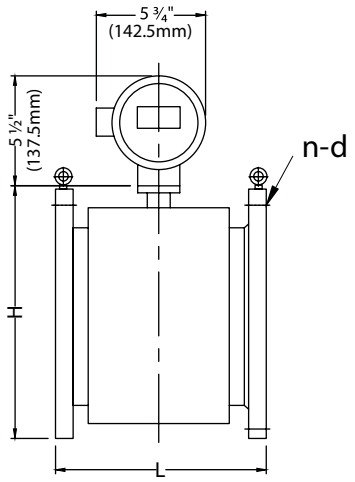

Integral Type (≥4")

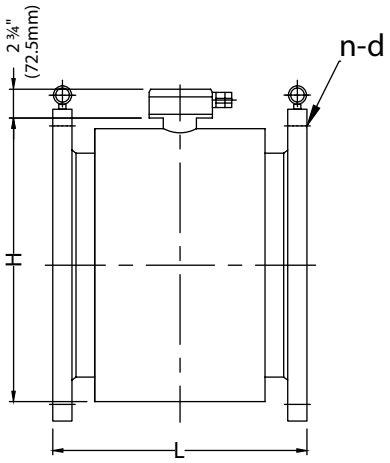

Separate Type (≥4")

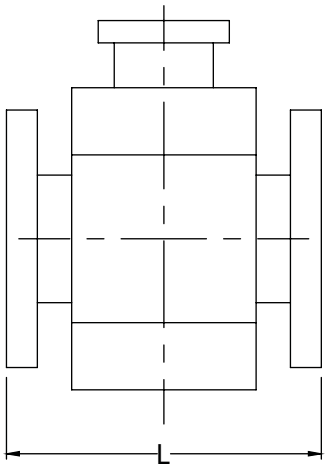

Sensor (½"to 3")

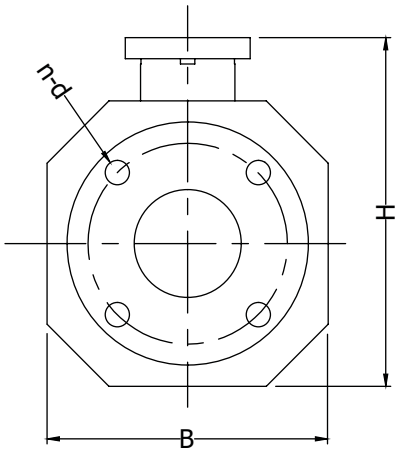

Sensor(½" to 3")

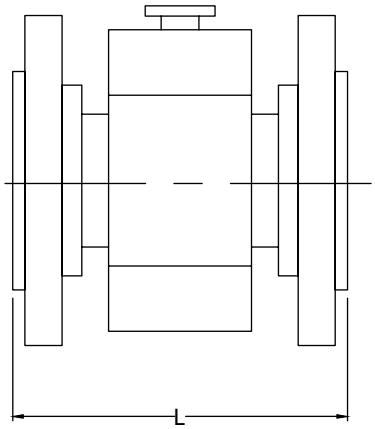

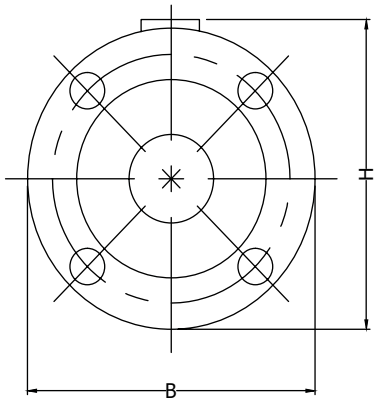

Outline Dimension of Medium and High Pressure Sensors

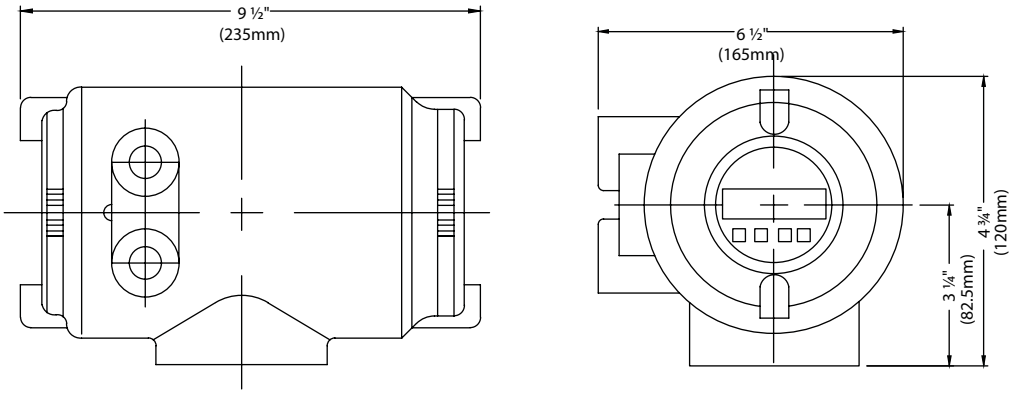

Direct Mount Transmitter

Size Inches (ft)	Sensor Dimensions Inches (ft)			Flange Connection Dimension (ft)	Net Weight in lbs (kg)
	L	B	H	n-d	
½" (0.04)	7.87" (0.65)	5.11" (0.42)	8.66" (0.72)	0.01-Φ0.04	17.63 (8)
1" (0.08)	7.87" (0.65)	5.59" (0.46)	9.05" (0.75)	0.01-Φ0.04	26.45 (12)
2" (0.16)	7.87" (0.65)	6.69" (0.55)	10.23" (0.85)	0.02-Φ0.05	39.68 (18)
3" (0.25)	7.87" (0.65)	7.87" (0.65)	11.22" (0.93)	0.02-Φ0.05	57.32 (26)
4" (0.33)	9.84" (0.82)	9.25" (0.77)	11.41" (0.95)	0.02-Φ0.07	66.13 (30)
5" (0.41)	9.84" (0.82)	10.62" (0.88)	12.79" (1.06)	0.02-Φ0.08	79.36 (36)
6" (0.5)	11.81" (0.98)	11.81" (0.98)	13.77" (1.14)	0.02-Φ0.08	92.59 (42)
8" (0.66)	13.77" (1.14)	13.38" (1.11)	15.15" (1.26)	0.03-Φ0.07	121.25 (55)
10" (0.83)	15.74" (1.31)	15.94" (1.32)	17.51" (1.45)	0.03-Φ0.08	154.32 (70)
12" (1)	19.68" (1.64)	18.11" (1.50)	20.27" (1.68)	0.03-Φ0.08	187.39 (85)
18" (1.5)	23.62" (1.96)	25.19" (2.09)	27.16" (2.26)	0.06-Φ0.09	330.69 (150)
20" (1.66)	23.62" (1.96)	28.14" (2.34)	29.92" (2.49)	0.06-Φ0.11	440.92 (200)
24" (2)	23.62" (1.96)	33.07" (2.75)	34.64" (2.88)	0.06-Φ0.13	573.20 (260)
28" (2.33)	27.55" (2.30)	35.23" (2.93)	38.18" (3.18)	0.07-Φ0.09	793.66 (360)

Specifications

Technical Specification

Accuracy			±0.5%, ±0.3% Optional
Repeatability			0.15%
Ambient Temperature	Sensor (Remote Type)		-4 °F to 158 °F (-20 °C to +70 °C)
	Converter		-4 °F to 158 °F (-20 °C to +70 °C)
	Integral Type		14 °F to 122 °F (-10 °C to +50 °C)
Humidity			5% to 95% RH (no frost)
Vibration Frequency			55Hz
Amplitude			0.55mm
Ambient Magnetic Field			≤400A/m
Fluid Temperature	Direct Mount		≤176°F (80°C)
	Separate Type	Rubber Lining	≤176°F (80°C)
		PTFE Lining	≤248°F (120°C)
Nominal Pressure			Limited to Flange Rating
Power Supply			18 to 36VDC, 85 to 220VAC
Enclosure			IP65
Output Signal			Pulse and 4 to 20 mA
Digital Communication			Modbus, RS485 or HART
Electrode Material			316SS or Hastelloy C and Specials
Lining Material			PTFE or Hard Rubber
Flange Material			Carbon Steel, Stainless Steel and Specials
Measuring Tube Material			Stainless Steel, Hastelloy C and Specials

Electrode Material Selection

Electrode Material	Application
Stainless Steel	Used for measuring water, waste water, inorganic acid, organic acid, or other corrosive medium
Hastelloy C	Used for measuring oxidizing acids such as nitric acid, mixed acid, and vitriol mixed liquid, also oxydized salts such as Fe^{++}, Cu^{++}, and other oxidizing agents such as pypocholoride solution whose temperature is higher than normal, and seawater

Lining Material

Lining material	Main performance	Application scope
PTFE	• Stable chemical performance, resists acid, alkali, saline solution and organic solvent. • Common wear-resisting property	-112 °F to 248 °F (-80 °C to 120 °C) Highly corrosive medium such as concentrated acid and concentrated alkaline
Synthetic Rubber	• Excellent elasticity, good breaking tenacity, good wear-resisting property • Resists acid solution, aqueous alkali, saline solution at normal low concentrations of acid solution	<176 °F (80 °C) Neutral abrasive pulp, slurry and coal slurry

Flow Range and Nominal Diameter Selection

Inch (ft)	Velocity	
	0.98 to 32.80 ft/sec	0.3 to 10 m/s
	gal/min	m3/hr
½" (0.04)	0.8 to 28.2	0.19 to 6.4
1" (0.08)	2.4 to 77.9	0.53 to 17.7
2" (0.16)	9.4 to 312.6	2.13 to 71.0
3" (0.25)	23.9 to 796.9	5.43 to 181
4" (0.33)	37.4 to 1246	8.49 to 283
5" (0.41)	58.6 to 1946.1	13.3 to 442
6" (0.5)	84.1 to 2800.2	19.1 to 636
8" (0.66)	149.3 to 4975.2	33.9 to 1130
10" (0.83)	233.8 to 7793.1	53.1 to 1770
12" (1)	335.5 to 11183.3	76.2 to 2540
18" (1.5)	757.3 to 25184.4	172 to 5720
20" (1.66)	933.4 to 31128.3	212 to 7070
24" (2)	1347.3 to 44909.2	306 to 10200
28" (2.33)	1831.6 to 60979.7	416 to 13850

Installation

Install flow meter at relative low of horizontal pipe or in upward vertical direction. Do not install the flow-meter at the highest point of the pipe and in the downward vertical direction.

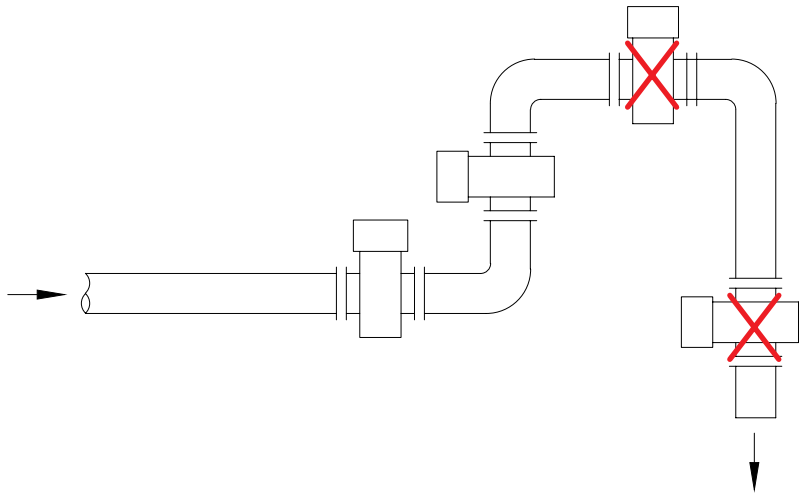

Install flow meter at the rising pipe

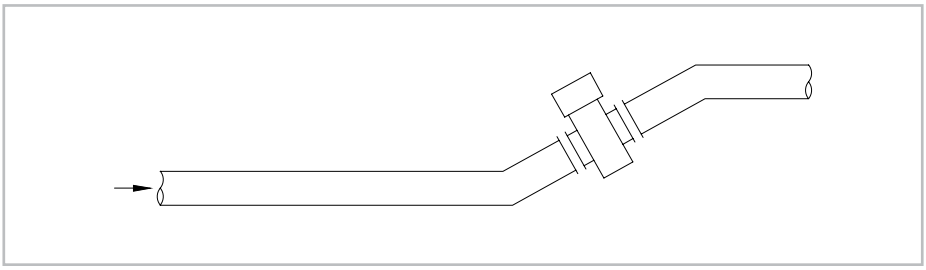

For installing at an open pipe, the flow meter should be installed at a relative low point. If the fall in the pipe is more than 16.40 ft, the vent valve should be installed at downstream of the sensor where it should have back pressure

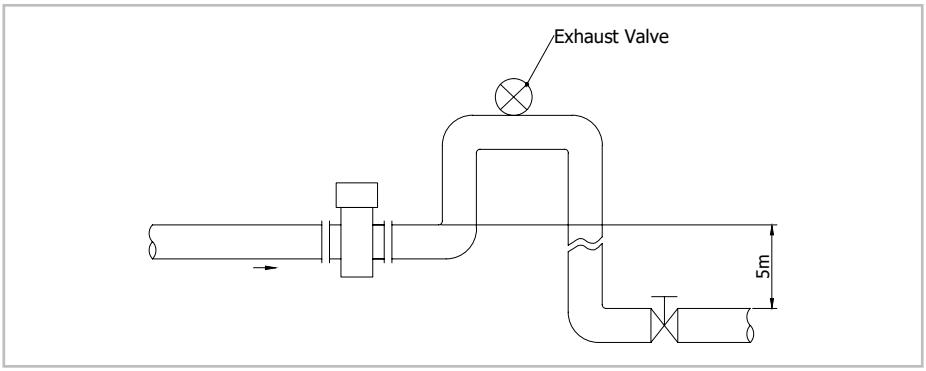

The control valve and stop valve should be installed at the downstream of the sensor not on the upstream side.

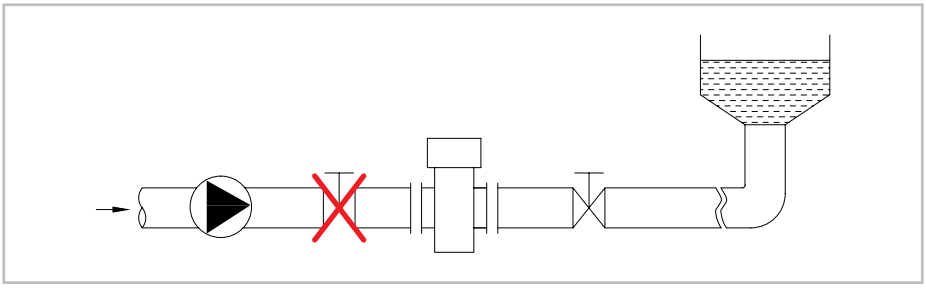

Sensor should be installed at the outlet of the pump not the inlet.

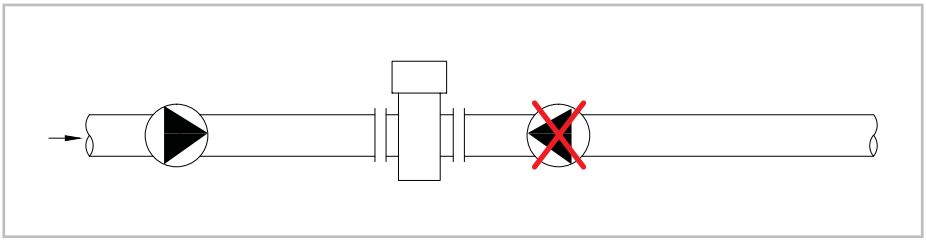

Flow meter installation in a measuring well:

1. Inlet
2. Entrance Gate
3. Cleaning Hole
4. Overflow Pipe
5. Flow meter
6. Nozzle Stub
7. Outlet
8. Drain Valve

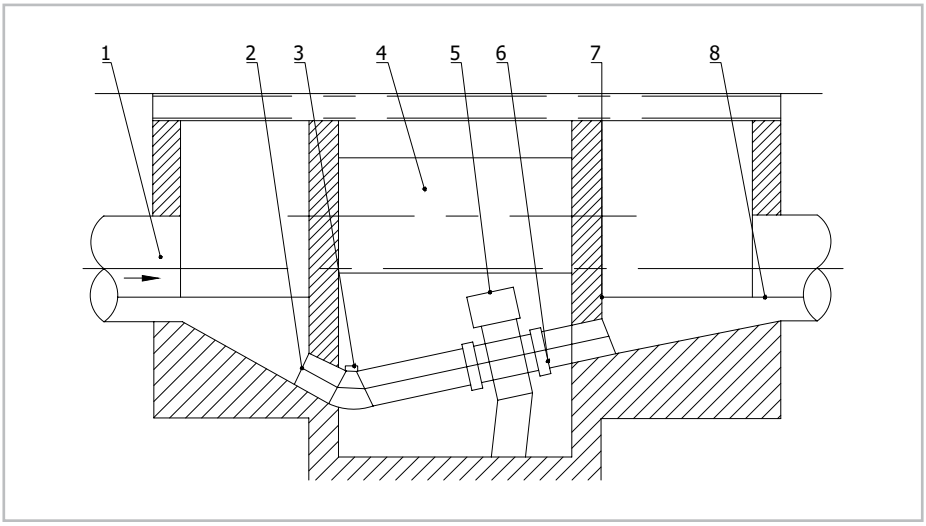

Model Chart

Example	Tek-Flux 1400A	025	1	I	HC	1	1	T	EA	Tek-Flux 1400A-25-1-I-HC-1-1-T-EA
Series	Tek-Flux 1400A									Electromagnetic Flow Meter
Size		015								½" (Only PTFE Liner / HC Electrodes)
		025								1" (Only PTFE Liner / HC Electrodes)
		040								1½" (Only PTFE Liner / HC Electrodes)
		050								2"
		080								3"
		100								4"
		150								6"
		200								8"
		250								10"
		300								12"
		450								18"
		500								20"
		600								24"
		700								28"
Transmitter			1							Direct Mount
			2							Remote Mount (comes with 30 ft. of cable)
Output				I						4-20 mA
				S						Modbus RS485
				H						4-20 mA, HART
Electrodes					SS					316L SS
					HC					Hastelloy C (Adder only for 2" or larger)
					X					Special
Process Connection						1				150# ANSI Flange
						2				AWWA Flange
						3				300# ANSI Flange
						6				600# ANSI Flange
Power Supply							1			18 - 28VDC
							2			90 - 220VAC
Liner Material								H		Hard Rubber
								T		PTFE (Adder only for 2" or larger)
Options									IP68	IP68 Submersible Sensor Rating (Remote Only)
									EA	Extended Accuracy (0.3%)
									FC	Factory Configuration

Popular Models

Model Number	Description
1400A-50-1-I-SS-1-1-H	2", Hard Rubber, SS Electrodes, 150# Flange
1400A-80-1-I-SS-1-1-H	3", Hard Rubber, SS Electrodes, 150# Flange
1400A-100-1-I-SS-1-1-H	4", Hard Rubber, SS Electrodes, 150# Flange
1400A-150-1-I-SS-1-1-H	6", Hard Rubber, SS Electrodes, 150# Flange
1400A-15-1-I-HC-1-1-T	½", PTFE, Hastelloy C Electrodes, 150# Flange
1400A-25-1-I-HC-1-1-T	1", PTFE, Hastelloy C Electrodes, 150# Flange
1400A-50-1-I-HC-1-1-T	2", PTFE, Hastelloy C Electrodes, 150# Flange
1400A-80-1-I-HC-1-1-T	3", PTFE, Hastelloy C Electrodes, 150# Flange
1400A-100-1-I-HC-1-1-T	4", PTFE, Hastelloy C Electrodes, 150# Flange
1400A-150-1-I-HC-1-1-T	6", PTFE, Hastelloy C Electrodes, 150# Flange

Accessories

Model Number	Description
1400A-GR-2	Two 2" Stainless Steel Grounding Rings
1400A-GR-3	Two 3" Stainless Steel Grounding Rings
1400A-GR-4	Two 4" Stainless Steel Grounding Rings
1400A-GR-6	Two 6" Stainless Steel Grounding Rings
1400A-GR-8	Two 8" Stainless Steel Grounding Rings
1400A-GR-10	Two 10" Stainless Steel Grounding Rings
1400A-GR-12	Two 12" Stainless Steel Grounding Rings
1400A-GR-18	Two 18" Stainless Steel Grounding Rings
1400A-GR-20	Two 20" Stainless Steel Grounding Rings
1400A-GR-24	Two 24" Stainless Steel Grounding Rings

Note: Please note that when ordering a PTFE lined meter that grounding rings are included and do not have an additional cost

Customer Service & Support

TEK-TROL LLC reserves the right to change the designs and/or materials of its products without notice. The contents of this publication are the property of TEK-TROL LLC and cannot be reproduced by any other party without written permission. Copyright © 2021 TEK-TROL LLC
TEK-TROL LLC
DOC #TEK/PO/CAT/210415/1400A/r02.2

www.tek-trol.com

Tek-Trol LLC
796 Tek Drive Crystal Lake, IL 60014,
USA
Sales: +1 847-857-6076

Tek-DPro Flow Solutions
PO Box 121 Windsor, Colorado 80550,
USA
Sales: +1 847-857-6076

Tek-Trol Solutions BV
Florijnstraat 18, 4879 AH Etten-Leur,
Netherlands
Sales: +31 76-2031908

Tek-Trol Middle East FZE
SAIF Zone, Y1-067, PO BOX No.
21125, Sharjah, UAE
Sales: +971-6526-8344

Support: +1 847-857-6076 | Email: tektrol@tek-trol.com | www.tek-trol.com

Tek-Trol is a fully owned subsidiary of TEKMATION LLC. We offer our customers a comprehensive range of products and solutions for process, power and oil & gas industries. Tek-Trol provides process measurement and control products for Flow, Level, Temperature & Pressure measurement, Control valves & Analyzer systems. We are present in 15 locations globally and are known for our knowledge, innovative solutions, reliable products and global presence.