Technology Solutions

TEK-BAR 3110B

Smart Gauge Pressure Transmitters

Instruction Manual

Document Number: IM-3110B

www.tek-trol.com

www.tek-trol.com

NOTICE

Read this manual before working with the product. For personal and system safety, and for optimum product performance, make sure you thoroughly understand the contents before installing, using, or maintaining this product.

For technical assistance, contact
Customer Support
796 Tek-Drive
Crystal Lake, IL 60014
USA
Tel: +1 847 857 6076

© COPYRIGHT Tek-Trol LLC 2021

No part of this publication may be copied or distributed, transmitted, transcribed, stored in a retrieval system, or translated into any human or computer language, in any form or by any means, electronic, mechanical, manual, or otherwise, or disclosed to third parties without the express written permission. The information contained in this manual is subject to change without notice.

Table of Contents

1 Safety Instructions 3
1.1 Intended Use 3
1.2 Certification 3
1.3 Safety Instructions from the Manufacturer 3
1.3.1 Disclaimer 3
1.3.1 Product Liability and Warranty 3
1.3.2 Information Concerning the Documentation 3
1.3.3 Safety Precautions 3
1.4 Packaging, Transportation, and Storage 4
1.4.1 Packaging 4
1.4.2 Transportation 5
1.4.3 Storage 5
1.5 Nameplate 5

2 Product Description 6
2.1 Introduction 6
2.2 Measurement Principle 6
2.3 Specifications 7
2.3.1 General Specifications 7
2.3.2 Damping Time 7
2.3.3 Environmental Conditions 7
2.3.4 Power Supply 8
2.3.5 Measuring Range Limit for Tek-Bar 3110B 8
2.4 Exploded View of Transmitter 9
2.5 Dimensional Drawings 9
2.6 Model Chart 10

3 Installation 10
3.1 Selecting the Installation Location 11
3.2 Installation Procedure 11
3.2.1 Install Pressure Transmitter 11
3.2.2 Process Connections 12
3.2.3 Housing Rotation 13
3.2.4 Terminal Side of Transmitter 13
3.2.5 LCD Display 13
3.2.6 Conduit Installation 14
3.3 Mounting Requirements 14
3.3.1 Liquid Flow Measurement 14
3.3.2 Gas Flow Measurement 15
3.3.3 Steam Flow Measurement 15
3.4 Field Adjustment 16
3.4.1 Zero Point Adjustment 16
3.4.2 Full Span Adjustment 16
3.5 Product Usage 16
3.5.1 Pipeline pressure measurement-differential pressure transmitter 16
3.5.2 Steam flow measurement 17

3.5.3 Liquid flow measurement 17
3.5.4 Air flow measurement 17
3.5.5 Open container level measurement-single flange level transmitter 18
3.5.6 Sealed container level measurement-single flange level transmitter 18

4 Electrical Connections 18
4.1 Grounding of Measuring Device 19
4.2 Power Supply Specifications and Connection 19
4.3 Cable Protection System 20
4.3.1 Standard Protection System 21
4.3.2 Explosion-proof Tube Protection System 21
4.3.3 Connection to the HART Handheld Communicator 22

5 Operation 22
5.1 Local Operation and Display 22
5.2 Operation in safe and hazardous area 22
5.3 Configuration 23
5.3.1 Key Operation 23
5.3.2 Factory Reset 24
5.4 Analog button programming menu 24
5.4.1 Key Operation 24
5.4.2 Detailed operating instructions. 25
5.5 Modbus Programming Menu 27
5.5.1 Key Operation 27
5.5.2 Detailed operating instructions 28
5.6 Menu Tree 30
5.7 Handheld Communicator 31

6 Maintenance 32
6.1 Hardware Maintenance 32
6.1.1 Test Terminal 32
6.1.2 Disassembling the Electronics Housing 32
6.1.3 External Cleaning 33
6.1.4 Depot Repair 33
6.1.5 Discard Disposal 33

7 Troubleshooting 34
7.1 Symptoms and Corrective Measures 34
7.2 Tek-Bar 3110B SMART Pressure Transmitter LCD Display error codes 36

1 Safety Instructions

1.1 Intended Use

Tek-Bar 3110B is a Smart Differential Pressure Level Transmitter used for pressure, flow, level and density measurement of steam and liquids.
The manufacturer is not liable for damage caused by improper or non-designated use.

1.2 Certification

Tek-Bar 3110B has CSA approval (Class I Div. I)

1.3 Safety Instructions from the Manufacturer

1.3.1 Disclaimer

The manufacturer will not be held accountable for any damage that happens by using its product, including, but not limited to direct, indirect, or incidental and consequential damages. Any product purchased from the manufacturer is warranted in accordance with the relevant product documentation and our Terms and Conditions of Sale.

The manufacturer has the right to modify the content of this document, including the disclaimer, at any time for any reason without prior notice, and will not be answerable in any way for the possible consequence of such changes.

1.3.1 Product Liability and Warranty

The operator shall bear authority for the suitability of the device for the specific application. The manufacturer accepts no liability for the consequences of misuse by the operator. Wrong installation or operation of the devices (systems) will cause the warranty to be void. The respective Terms and Conditions of Sale, which forms the basis for the sales contract shall also apply.

1.3.2 Information Concerning the Documentation

To prevent any injury to the operator and damage to the device it is essential to read the information in this document and read the applicable national standard, and safety instruction. These operating instructions contain all the information that is required in various stages, like product identification, incoming acceptance and storage, to mounting, connection, operation and commissioning through to troubleshooting, maintenance and disposal.

1.3.3 Safety Precautions

You must read these instructions carefully prior to installing and commissioning the device. These instructions are an important part of the product and must be kept for future reference. Only by observing these instructions, optimum protection of both personnel and the environment, as well as safe and fault-free operation of the device can be ensured.

For additional information that are not discussed in this manual, contact the manufacturer.

Warnings and Symbols Used

The following safety symbol marks are used in this operation manual and on the instrument.

WARNING

Indicates a potentially hazardous situation which, if not avoided, could result in death or serious injury.

CAUTION

Indicates a potentially hazardous situation which, if not avoided, may result in minor or moderate injury. It may also be used to alert against unsafe practices.

NOTE

Indicates that operating the hardware or software in this manner may damage it or lead to system failure.

1.4 Packaging, Transportation, and Storage

This section contains information regarding packaging, transportation, and storage.

1.4.1 Packaging

The original package consists of

1. Tek-Bar 3110B Smart Differential Pressure Transmitter
2. Documentation

NOTE

Unpack and check the contents for damages or signs of rough handling. Report damage to the manufacturer immediately. Check the contents against the packing list provided.

1.4.2 Transportation

- Avoid impact shocks to the device and prevent it from getting wet during transportation.
- Verify local safety regulations, directives, and company procedures with respect to hoisting, rigging, and transportation of heavy equipment.
- Transport the product to the installation site using the original manufacturer's packing whenever possible.

1.4.3 Storage

If this product is to be stored for a long period of time before installation, take the following precautions:

- Store your product in the manufacturer's original packing used for shipping.
- Storage location should conform to the following requirements:
  - Free from rain and water
  - Free from vibration and impact shock
  - At room temperature with minimal temperature and humidity variation
- Before storing a used flowmeter remove any fluid from the flowmeter line completely. Properties of the instrument can change when stored outdoors.

1.5 Nameplate

The nameplate lists the order number and other important information, such as design details and technical data.

NOTE

Check the device nameplate to ensure that the device is delivered according to your order. Check for the correct supply voltage printed on the nameplate.

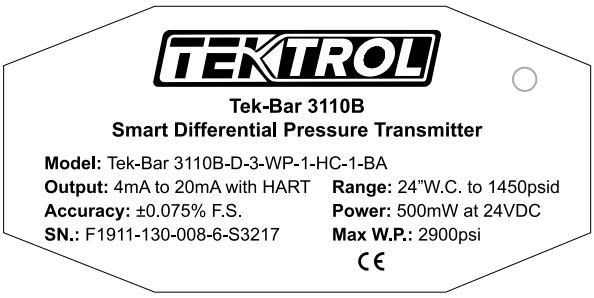

2 Product Description

This section covers the reference and specification data, as well as ordering information.

2.1 Introduction

Tek-Bar 3110B single crystal silicon pressure transmitter utilizes world's leading mono crystal silicon pressure sensor technology and outstanding encapsulation technology. It can handle the most rigorous industrial applications and it can cope up with extreme chemical, mechanical and electrical working conditions. Highly accurate and reliable measurement of level, density and pressure of liquid, gases or steam is possible with Tek-Bar 3110B. The performance accuracy is up to 0.075% of URL. This high-performance pressure transmitter meticulously designed by Tek-Trol supports HART communication protocol and IP66 waterproof protection. It is well equipped with several features that facilitate easy installation, start-up and minimum maintenance.

2.2 Measurement Principle

Tek-Bar 3110B Smart Differential Pressure Transmitter works on mono silicon technology. The mono silicon pressure sensor is located on the top of the metal body and away from the process fluid forming mechanical and thermal isolation.

Pressure applied on the diaphragm creates stress on the pair of piezoelectric crystals causing a change in the voltage resistance. The change in resistance is directly proportional to applied pressure and is transferred to the transmitter body through lead wires. The transmitter carries out the further process of signal conditioning.

Built on semiconductor technology, the resistance change due to piezoelectric effect is notably higher than that exhibited in standard strain gauges. Therefore, the sensitivity of mono crystal pressure sensors is higher than most of other pressure sensor types.

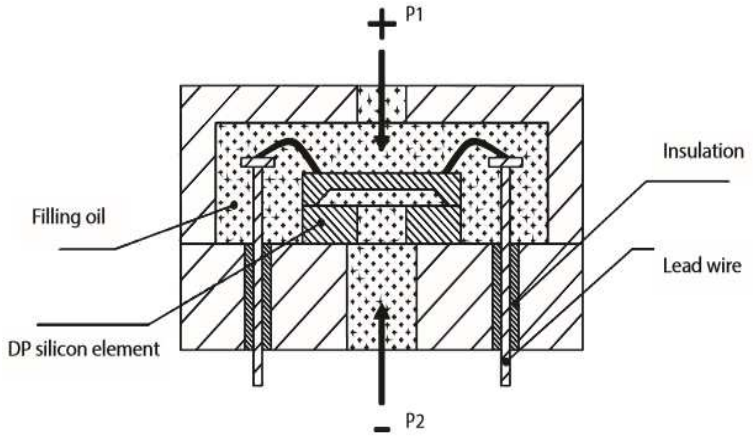

2.3 Specifications

2.3.1 General Specifications

Parameter	Description
Pressure Type	Differential
Reference Accuracy	±0.075% F.S.
Wetted Materials	Hastelloy C and 316 LSS
Measuring Range	24"W.C. to 1450psid
Stability	±0.2 % URL/5 year
Process connection	¼ " NTP Female
Working Humidity	5 to 100% RH at 104 °F
Output Signal	4mA to 20mA with HART® Communication (Optional Modbus RS485 and 1 to 5VDC)
Electrical connection	½" NPT Female
HART loop resistance	250 to 550 ohms
Approvals	CE, CSA Class I Div I
Weight (excluding Option Items)	8.81lb (without mounting bracket and process connection adapter)
Testing Standard	IEC60770

2.3.2 Damping Time

Parameter	Description
Damping time of amplifier	0-100 s adjustable
Diaphragm capsule (isolated diaphragm and silicon oil filling) damping time	≤0.2 s
Start-up after power off	≤6 s
Normal services after data recovery	≤3 s

2.3.3 Environmental Conditions

Parameter	Description
Working Temperature	-40 °F to 185 °F (-40 °C to 85 °C),
	Integrated LCD display: -4 °F to 158 °F (-20 °C to 70 °C)
Storage temperature	-40°F to 230°F (-40°C to 110°C)
	Integrated LCD display: -40 °F to 185 °F (-40 °C to 85 °C)
Media temperature	Silicon oil filling: -40 °F to 248 °F (-40°C to 120 °C)
Working humidity	5-100% RH at 104 °F

2.3.4 Power Supply

Parameter	Description
Standard	10.5 to 55VDC
HART protocol	16.5 to 55VDC, communication load resistance 250Ω
Load resistance	0 to 2119Ω for working condition, 250 to 600 Ω for HART protocol
Transmission distance	<1000 m
Power consumption	≤500 mW at 24VDC, 20.8mA

2.3.5 Measuring Range Limit for Tek-Bar 3110B

Nominal Value	Smallest calibrated span	Lower range limit (LRL)	Upper range limit (URL)	Static pressure limit	High pressure side overload limit	Low pressure side overload limit
24”w.c.	0.80”w.c.	-24”w.c.	24.11”w.c.	3625psid	3625psid	2320psid
160”w.c.	1.60”w.c.	-160.74”w.c.	160.74”w.c.	5801psid	3625psid	2320psid
1000”w.c.	10”w.c.	1000”w.c.	1000”w.c.	5800psid	3625psid	2320psid
145psid	40”w.c.	-2000”w.c.	145psid	5800psid	3625psid	2320psid
435psid	120”w.c.	-2000”w.c.	435psid	5800psid	3625psid	2320psid
1450psid	40”w.c.	-2000”w.c.	1450psid	5800psid	3625psid	2320psid

Nominal Value	Smallest calibrated Span	Lower Range Limit (LRL)	Upper Range Limit (URL)	Static Pressure Limit	High pressure side overload limit	Low pressure side overload limit
6kPa	0.2kPa	-6kPa	6kPa	25MPa	25MPa	16MPa
40kPa	0.4kPa	-40kPa	40kPa	40MPa	25MPa	16MPa
250kPa	2.5kPa	-250kPa	250kPa	40MPa	25MPa	16MPa
1MPa	10kPa	-500kPa	1MPa	40MPa	25MPa	16MPa
3MPa	30kPa	-500kPa	3MPa	40MPa	25MPa	16MPa
10MPa	100kPa	-500kPa	10MPa	40MPa	25MPa	16MPa

Nominal Value	Smallest calibrated Span	Lower Range Limit (LRL)	Upper Range Limit (URL)	Static Pressure Limit	High pressure side overload limit	Low pressure side overload limit
0.06bar	0.002bar	-0.06bar	0.06bar	250bar	250bar	160bar
0.4bar	0.004bar	-0.4bar	0.4bar	400bar	250bar	160bar
2.5bar	0.025bar	-2.5bar	2.5bar	400bar	250bar	160bar
10bar	0.1bar	-5bar	10bar	400bar	250bar	160bar
30bar	0.3bar	-5bar	30bar	400bar	250bar	160bar
100bar	1bar	-5bar	100bar	400bar	250bar	160bar

2.4 Exploded View of Transmitter

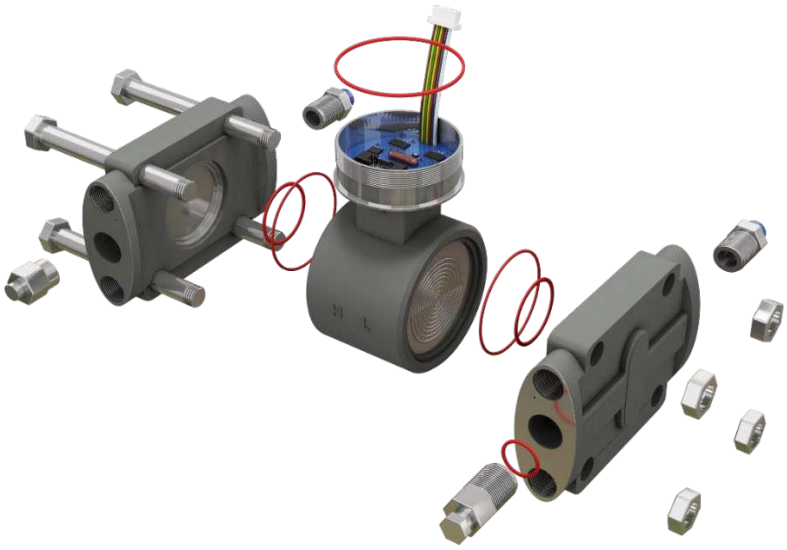

2.5 Dimensional Drawings

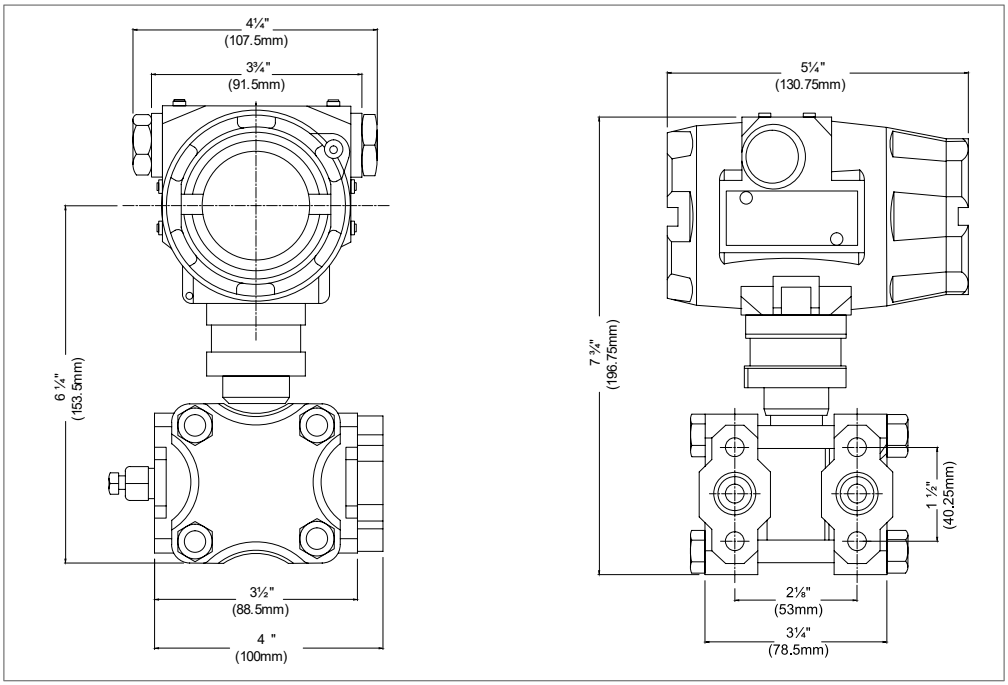

2.6 Model Chart

Example	Tek-Bar 3110B-D	3	WP	1	HC	1	#	Tek-Bar 3110B-D-3-WP-1-HC-1
Series	Tek-Bar 3110B-D							Smart Differential Pressure Transmitter
Range Options		1						0 to 24"w.c.
		2						0 to 160"w.c.
		3						0 - 1000"w.c.
		4						0 - 145psid
		5						0 - 435psid
		6						0 - 1450psid
Approval Rating			WP					General Purpose NEMA 4X/IP66
			CSA					CSA Class I Div I Explosion-proof
Process Connections				1				¼" NPT Female
				X				Diaphragm Seal
Diaphragm Material					HC			Hastelloy C
Electrical Connections						1		½" NPT Female
Options							MOD	Modbus RS485 Communication
							CC	Custom Calibration with 5 point Calibration Certificate
							FC	Factory Configuration, No Certificate
							BA	Stainless Steel Bracket (Angle type) with SST Bolts
							3WF	3-Way Manifold Valve
							5WF	5-Way Manifold Valve
							BF	Stainless Steel Bracket (Flat type) with SST Bolts
							TAG	Stainless Steel Hang Tag
							O	1/2"-14 NPTF, Oval Flange Process Connection Adapter (Includes 2 O-rings, adapters, and bolts)
							VDC	1 to 5VDC Output
							IP68	Submersible Rated

3 Installation

This section covers instructions on installation and commissioning. Installation of the device must be carried out by trained, qualified specialists authorized to perform such works.

CAUTION

- When removing the instrument from hazardous processes, avoid direct contact with the fluid and the meter.
- All installation must comply with local installation requirements and local electrical code

3.1 Selecting the Installation Location

Prior to product installation, check the model, specifications and installation location for the transmitter. The transmitter is designed to withstand severe environmental conditions. However, follow the enlisted precautions while selecting the installation site to ensure stable and accurate operation for years.

- **Ambient Temperature**
  Avoid locations subjected to significant temperature gradient or wide temperature variations. If transmitter is exposed to radiant heat from plant's equipment, then providing adequate thermal isolation and/or ventilation is desirable.

- **Ambient Atmosphere**
  Avoid corrosive atmosphere while installing the transmitter. If it must be installed in a corrosive atmosphere, then provide adequate ventilation and take the necessary measures to prevent intrusion or stagnation of rain water in conduits.

- **Shock and Vibration**
  Although the transmitter is designed to withstand shock and vibrations, it is recommended to select an installation site with minimum shock and vibration to avoid device damage and improve measurement accuracy.

3.2 Installation Procedure

This section includes the information regarding installation of the transmitter for safe and precise functioning. It provides the procedure and instruction for mounting, transmitter functions, and installation for specific applications.

3.2.1 Install Pressure Transmitter

Direct installation or mounting bracket installation may be used depending on the application and installation site requirement. Various mounting scenarios are illustrated in sections below.

3.2.1.1 Mounting Bracket Installation Types

Pipe mounting bent bracket

Plate mounting bent bracket

Pipe mounting flat bracket.

3.2.2 Process Connections

3.2.2.1 Taper Thread Connection

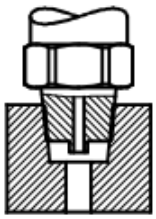

Use tapered thread connections to make better seals. Sealing with Teflon tape or sealant glue results in strong and leak resistant connections.

3.2.2.2 Flange Connection

Choose gasket according to the properties of the process medium and the temperature range. Pay attention to the bolt balance lock.

3.2.2.3 Clamp Connection

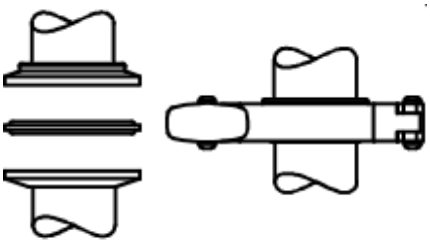

Choose gaskets that meet specified standards to avoid excessive clamp locking and squeezing gasket. Excessive locking of clamp may damage the sensing diaphragm and cause measuring error.

NOTE

Engage process connection with a minimum of 7 thread connections and tighten the housing rotation set screw to prevent it from rotating.

3.2.3 Housing Rotation

To ensure the visibility of LCD display

- Loosen the housing screw.
- Rotate housing to the desired angle up to 360°
- Re-tighten the housing screw.

Housing Screw

3.2.4 Terminal Side of Transmitter

Mount the transmitter in such a way that the terminal side is easily accessible to the operator.

3.2.5 LCD Display

Display module is used in field adjustment for parameter settings and site configuration before starting the measurement process. The local 5-digit LCD displays important parameters, which can be directly monitored at the measuring point. It enables the operator to configure the device using the function matrix.

The alignment of the display device can be adjusted vertically or horizontally as per the requirement of installation location. Unscrew the screws on either sides of the LCD screen to rotate it 90° clockwise or counter clockwise. The figure below illustrates the vertical and horizontal arrangement of the display device.

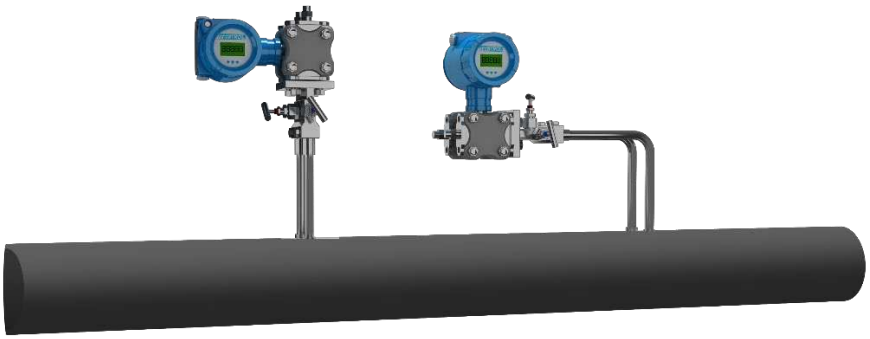

Vertical and horizontal arrangement

3.2.6 Conduit Installation

Improper sealing of connections may damage the transmitter due to excess moisture accumulation. Mount the transmitter with electrical housing positioned downward so that the excess of moisture is condensed and drained out from the casing. Secondly, install wiring with a drip loop and ensure the bottom of the drip loop is mounted lower than the conduit connections or the transmitter housing to avoid moisture accumulation in the housing.

NOTE

Conduit thread must be engaged with a minimum of 5 thread connections

3.3 Mounting Requirements

Impulse piping configuration and transmitter position depends on specific measurement conditions. Follow the procedure below while installing transmitter for liquid, gases or steam processes.

3.3.1 Liquid Flow Measurement

- Place the taps to the side of the line/pipe to prevent residue deposits on the transmitter process isolators.
- Mount the transmitter beside or below the taps so gases can vent into the process line.
- Mount drain/vent the valve upward to allow gases to vent.

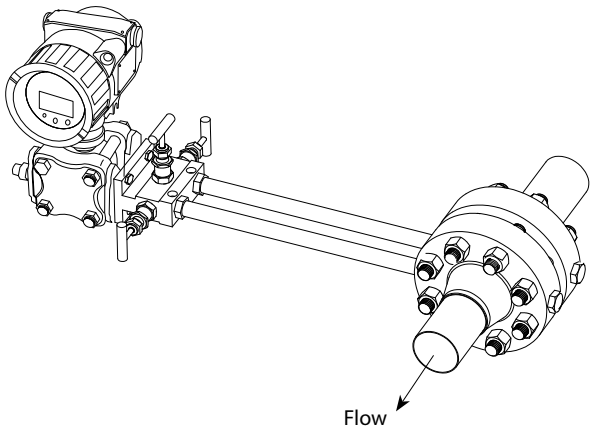

3.3.2 Gas Flow Measurement

- Place the taps in the top or side of the line.
- Mount the transmitter beside or above the taps so liquid will drain into the process line.

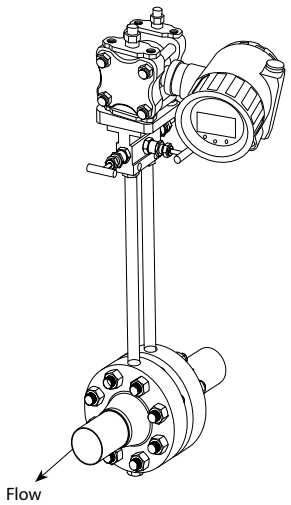

3.3.3 Steam Flow Measurement

- Place taps to the side of the line
- Mount the transmitter below the taps to ensure that the impulse piping stays filled with condensate.
- In steam service above 250°F (121°C), fill impulse lines with water to prevent the direct steam contact with the transmitter and to ensure accurate measurement at start-up.

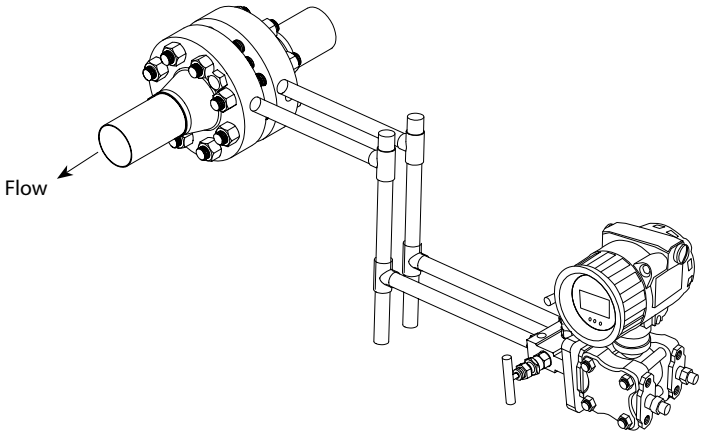

NOTE

For steam or other higher temperature processes, ensure that the temperature at the process connection does not exceed the transmitter's process temperature limits.

3.4 Field Adjustment

Perform field adjustments only after installing the transmitter at its final work location otherwise the set parameters may drift due to jerks while transporting or handling.

3.4.1 Zero Point Adjustment

- For sensor zero trim, ensure that the vessel is empty and there is no input medium pressure on the diaphragm. The vessel should be applied a normal atmospheric pressure. If applying external pressure to the transmitter make sure that the display is sufficiently stabilized (after approximately 10 to 15 seconds), before initiating any trim function.
- There are 3 ways of making input pressure "Zero".
  - Apply a "Zero" pressure source (mandatory for absolute pressure models)
  - Apply equal pressure on both HP and LP ports (DP models only)
  - Open equalizing valve of manifolds installed and venting to atmospheric pressure (applicable for Gauge & DP type models only)
- Sensor zero trim can be performed using an external HHC (Handheld calibrator), PC or PDA configurator, and/or using Zero/Span local push buttons provided on the transmitter.
- Using local push buttons set PV=0, refer to section 5.2 of this manual for detailed instructions. If using an external HHT or HART® PC configurator, refer to the user manual supplied by the third-party supplier.

3.4.2 Full Span Adjustment

- For full span adjustment, ensure that the vessel is filled with process medium to the maximum level.
- Maintain static pressure value within the minimum and maximum pressure range.
- Using local push buttons set output for lower and upper limit of the full scale i.e. 4mA and 20mA, refer to section 5.2 of this manual for detailed key operations.

The device is now ready for the real-time process measurement.

3.5 Product Usage

3.5.1 Pipeline pressure measurement-differential pressure transmitter

For high temperature steam measurement in a pipeline by differential pressure transmitter, pre-inject cooling water into the impulse line. Once the steam pipes are stable, slowly open the shut-off valve and start measuring.
Differential pressure transmitters are commonly used for micro pressure measurement of hydrostatic pressures such as filter and equipment leakage tests for improving accuracy.

3.5.2 Steam flow measurement

For steam flow measurement, up-tilt the guiding pressure tube by 45°. Ensure that transmitter installation location is at lower level than that of the process pipeline. Pre-inject cooling liquid into the impulse lines. Slowly open the shut-off valve to start measurement. Periodically open the drain vent to clear the residual liquid from impulse lines to improve the measurement accuracy.

3.5.3 Liquid flow measurement

For liquid flow measurement, tilt down the guiding pressure tube by 45°. Ensure that transmitter installation location is at lower level than that of the process pipeline. Pre-inject cooling liquid into the impulse lines. Slowly open the shut-off valve to start measurement. Periodically open the drain vent to clear the residual liquid, which will improve the measurement accuracy.

3.5.4 Air flow measurement

For gas flow measurement, up-tilt the guiding pressure tube by 45°. Ensure that transmitter installation location is at higher level than that of the process pipeline. Slowly open the shut-off valve to start measurement.

3.5.5 Open container level measurement-single flange level transmitter

Verify the process medium compatibility in case of open container level measurement. For accurate measurement, install the transmitter at a location where liquid level and temperature fluctuations are minimal.

3.5.6 Sealed container level measurement-single flange level transmitter

Use a single flange diaphragm system for sealed container level measurement. Increase the isolation tank and multiple shut-off valves. Periodically open the drain/vent valve to clear off the residual gas and liquid in the guiding pressure tube for higher accuracy.

4 Electrical Connections

This section covers all electrical connection requirement. Electrical connection of the device must be carried out by trained; qualified specialists authorized to perform such work by the installation site.

WARNING

- Connect all electrical cables when the power is switched off. If the device does not have switch-off elements, then, overcurrent protection devices, lightning protection and/or energy isolating devices must be provided by the customer.
- The device must be grounded to a spot in accordance with regulations to protect personnel against electric shocks.

NOTE

- When using the measuring device in hazardous areas, installation must comply with the corresponding national standards and regulations and the Safety Instructions or Installation or Control Drawings.

4.1 Grounding of Measuring Device

- Ensure proper grounding at control cabinet and pressure transmitter.
- Ground terminals are provided on the either sides (inside and outside) of the terminal box.
- Either one of these terminals may be used for grounding the transmitter.
- Use shielded twisted pair cable to avoid ground loops.
- Use internal ground terminals for direct grounding.

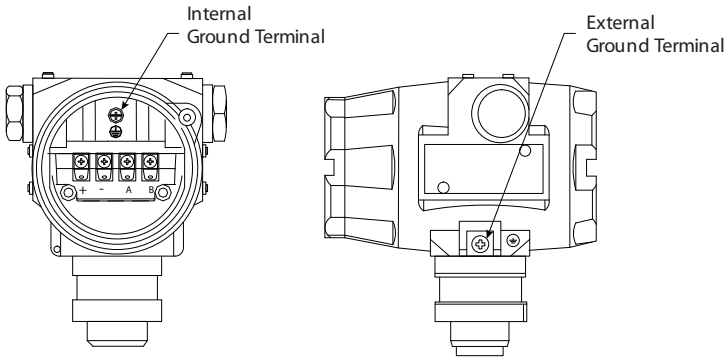

4.2 Power Supply Specifications and Connection

Use independent linear direct current power supply for pressure transmitter. Large resistive load results in high pressure drop. Therefore, it is recommended to consider the resistance across the signal cable, display meter and other equipment to ensure sufficient voltage is provided to the pressure transmitter for its normal operation.

Standard current signal output: 12 to 30VDC,
Current signal output with HART: 16.5 to 55VDC,
Current signal output with intrinsic safety: 12 to 30VDC,
Modbus-RTU/RS485 signal output: 5VDC/9 to 30VDC, 0.5 to 4.5VDC
Voltage signal output: 5 VDC/6 to 15VDC.

Remove the housing cover on terminal compartment side. Do not remove the cover in explosive atmospheres when the circuit is live.

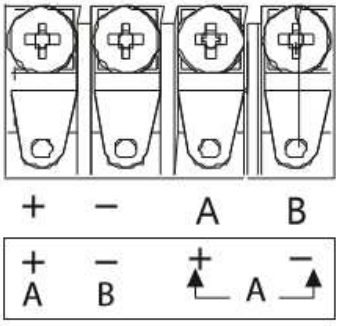

Label	Two Wires	Three Wires	Four Wires
+	Power +	Power +	Power +
-	Signal -	Power -	Power -
A		Signal +	Signal +
B			Signal -

Power supply connections:

- Connect power supply '+' terminal to transmitter '+' terminal.
- Connect signal '+' terminal to transmitter '-' terminal.
- Connect signal '-' terminal to power supply '-' terminal.
- Do not connect power signal wiring to the test terminals as it could damage the test diode.

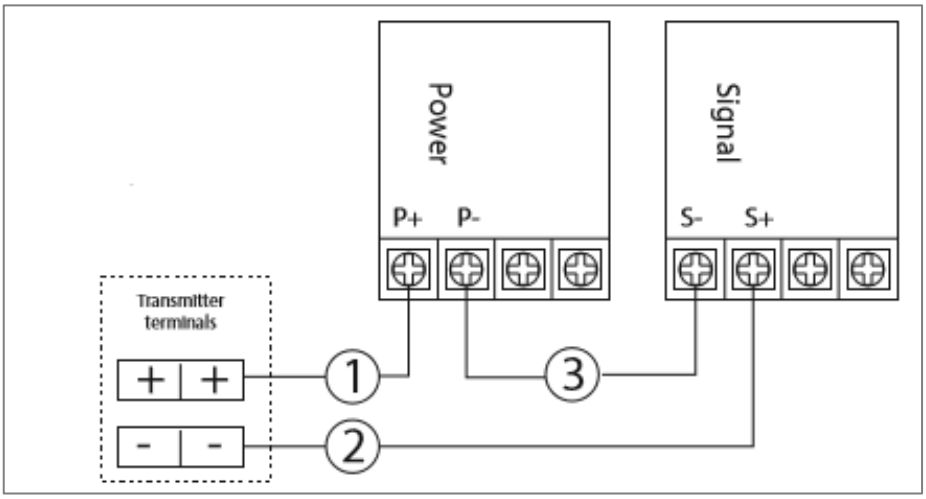

Power Supply Connections

4.3 Cable Protection System

Apply following cable protection measures to protect the connecting cables from various factors that affect negatively on the cable lifetime.

4.3.1 Standard Protection System

- To avoid liquid flowing along with the cable into the terminal box, configure a U-shaped ring between pull box and pressure transmitter as shown in the figure below.
- Ensure that the level of U-shaped bottom is maintained below the pressure transmitter.
- Use sufficiently long cable considering the maintenance and repair factors.

4.3.2 Explosion-proof Tube Protection System

If the transmitter is situated in dangerous area, use a high-quality metallic explosion-proof tube as a casing for the cable connecting the transmitter to the terminal box.

4.3.3 Connection to the HART Handheld Communicator

A loop resistance for HART Communicator is between 250Ω and 550Ω. Transmitter operates on 11.9 to 45VDC. Figure below illustrates the connection details for HHT communicator.

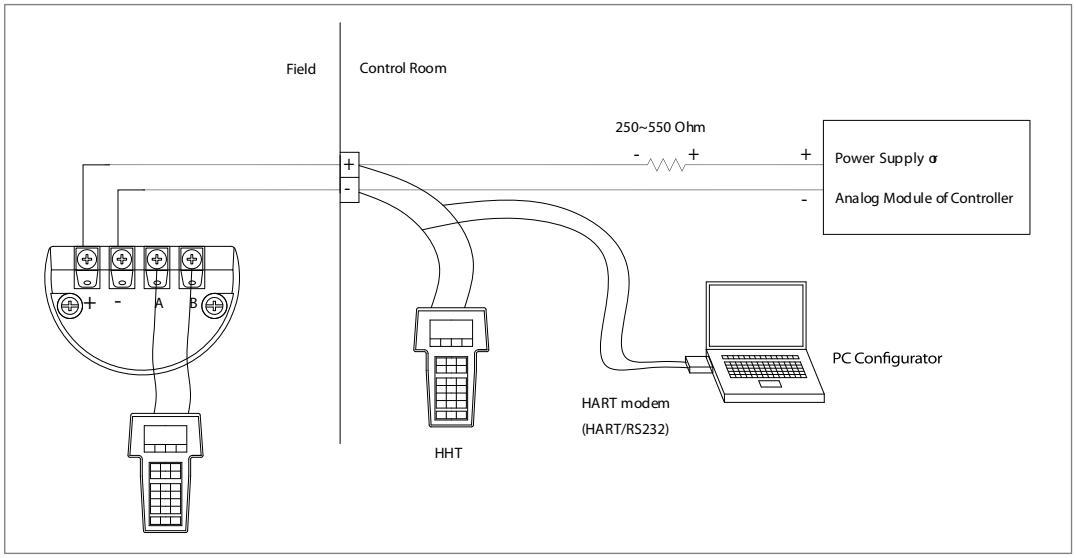

5 Operation

This section covers operation techniques and guidelines along with the configuration and calibration.

NOTE

Calibrate the instrument according to the instructions given in this section, otherwise it could lead to measurement error.

5.1 Local Operation and Display

Tek-Bar 3110B is available with the optional LCD display. The local display enables user to read important parameters directly at the measuring point and configure the device using the function matrix. The display indicates output and diagnostic messages. It features a two-line display with 5-digit. The first line displays measured value and the second line displays the engineering units. If LCD display is not available, then use HART for communication (Refer section 5.4).

5.2 Operation in safe and hazardous area

The internal and external buttons are provided for operation in safe and hazardous areas respectively.

- While operating in safe area, open the front cover and use internal buttons.
- While operating in hazardous area, slide the nameplate located at the upper side of the transmitter and use the external buttons.

External buttons for operation in hazardous area

5.3 Configuration

This section provides detailed information of initial setup required for transmitter functioning. The device consists of 3 operation key: S, Z and M which are used to set parameters and perform various operations. The primary function of each key is mentioned as below.

Z: Enter the setting options

S: Modify the parameter value

M: Confirm the set value and enter the next menu

The same keys are used in combination to perform several advanced functions.

5.3.1 Key Operation

Consider the factory setting for pressure measurement is set as follows:

Pressure range: -10 to 100 kPa; Output current display unit: mA

For performing zero-point adjustment and full span pressure adjustment follow the instructions and display screenshots given in the flow diagram below.

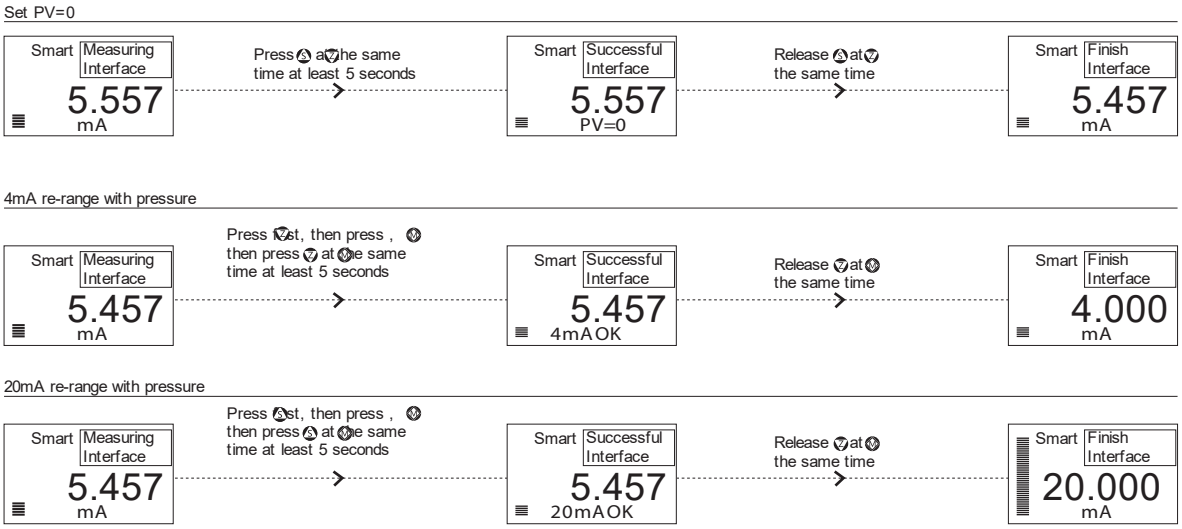

5.3.2 Factory Reset

Achieving the original factory settings at any point of time after the installation of the transmitter is possible by either of the following methods.

Method 1:

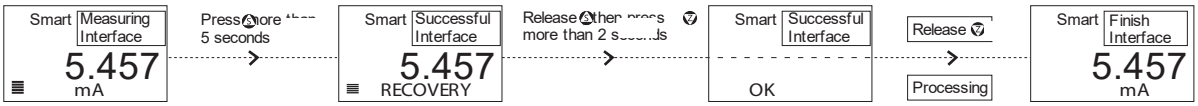

Method 2:

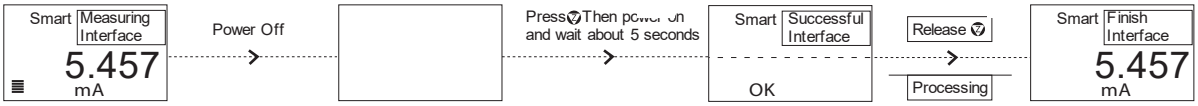

5.4 Analog button programming menu

5.4.1 Key Operation

Set PV=0

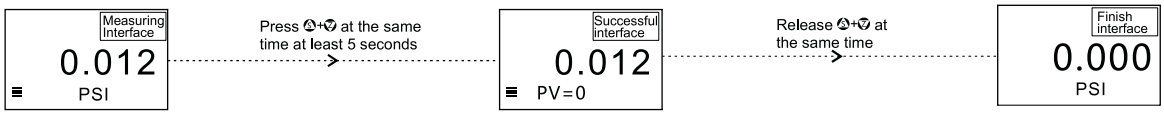

Factory reset

Method 1:

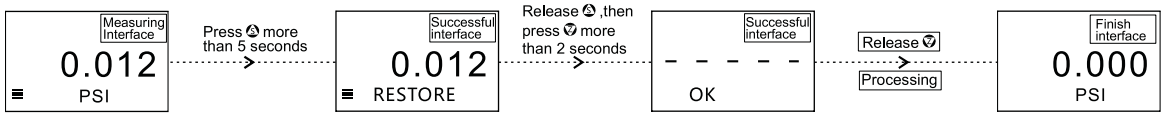

Method 2:

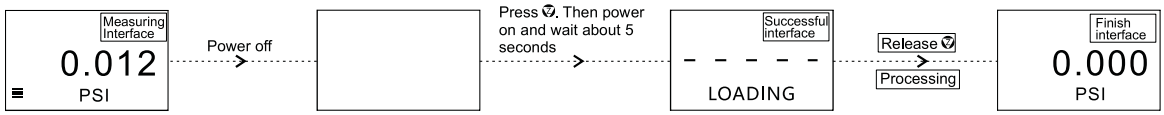

Sensor temperature display(SV: temperature & PV: pressure)dynamic switching, default temperature unit °F:

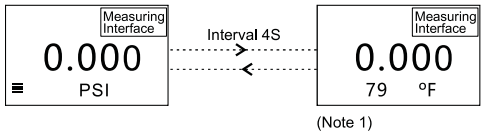

(Note 1)

SV display mode:

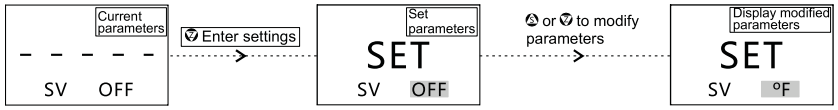

5.4.2 Detailed operating instructions.

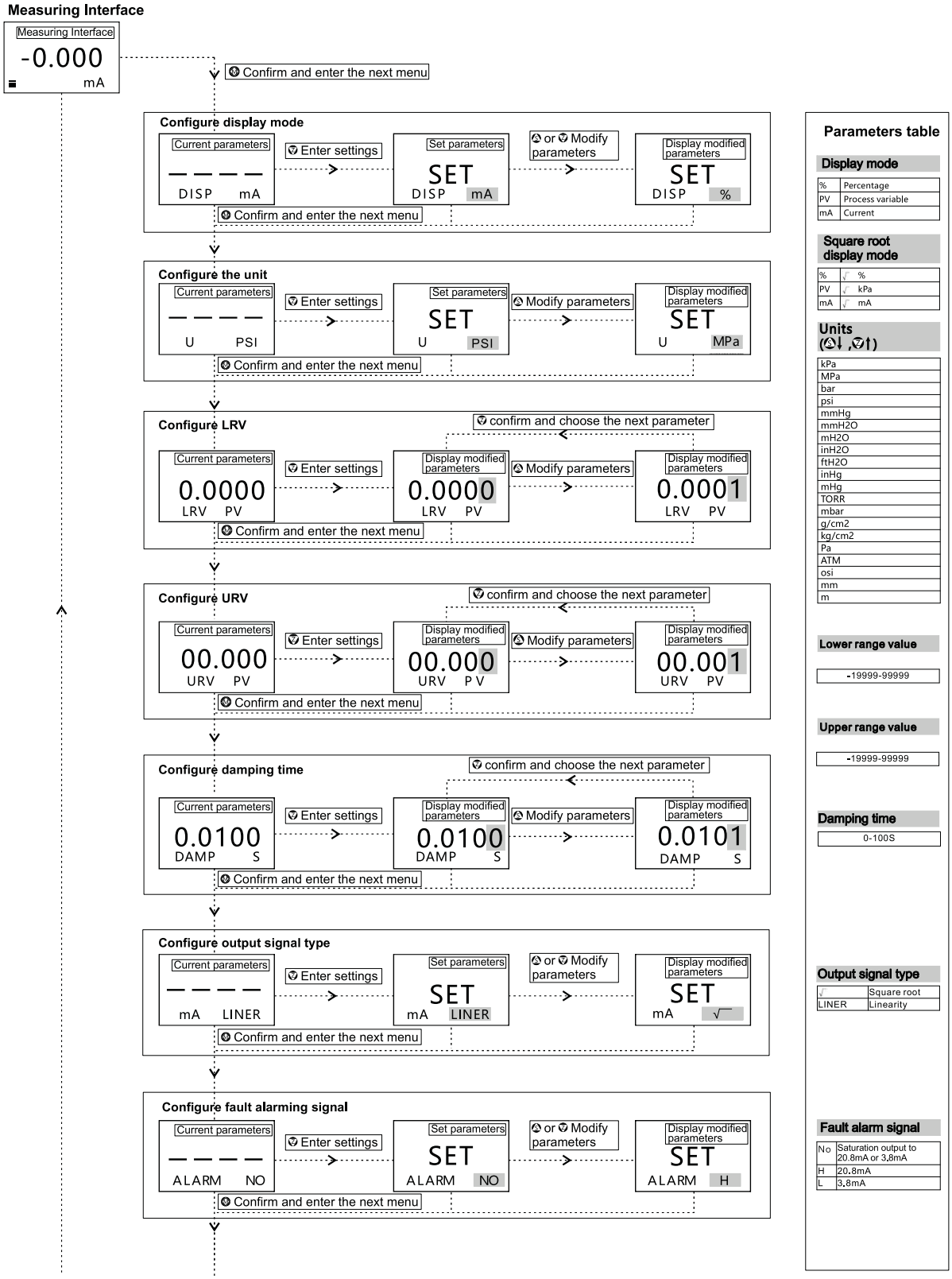

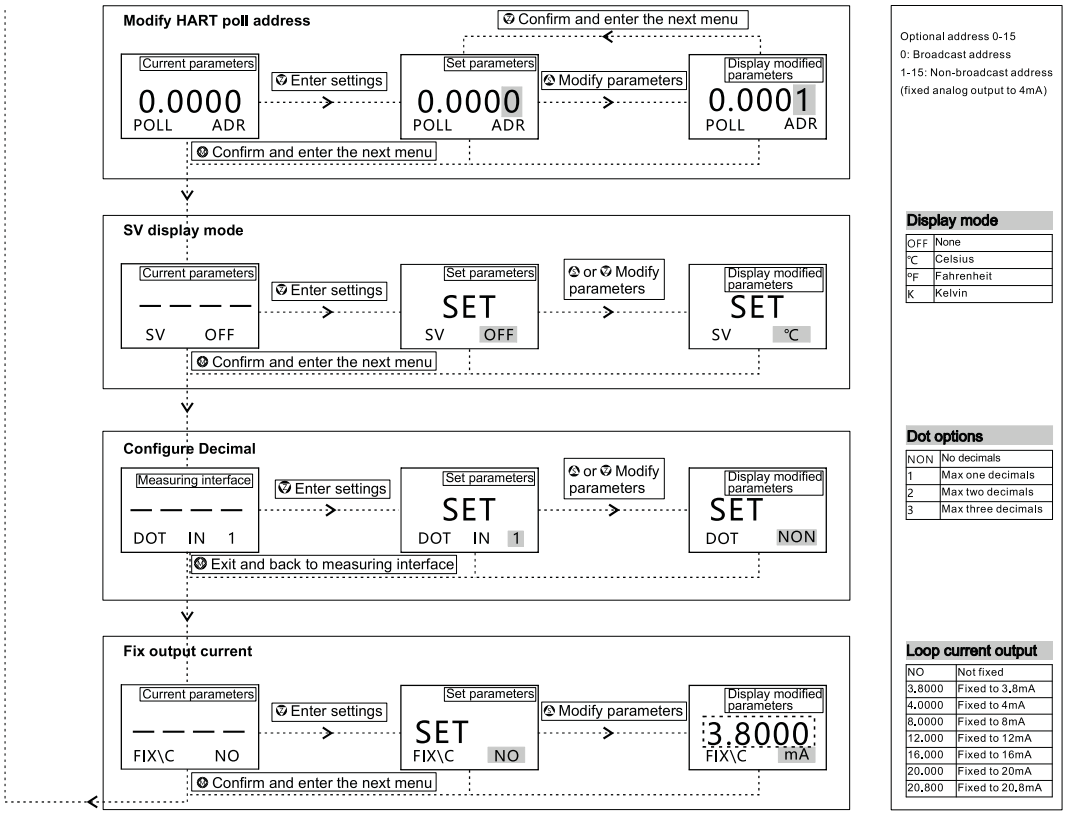

Parameter Table

Parameter	Values	
Display mode	%	Percentage
	pV	Process variable
	mA	Current
Units Use the keys Z () and S () to change the units	kPa	
	MPa	
	bar	
	psi	
	mmHg	
	mmH_2O	
	mH_2O	
	inH_2O	
	ftH_2O	
	inHg	
	mHg	
	TORR	
	mbar	
	g/cm^2	
	Kg/cm^2	
	Pa	
	ATM	
	mm	
Lower and Upper range	-19999-99999	
Damping Time	0 ~ 100s	

Output signal type	√	Square root
	LINER	Linear
Fault alarm signal	NO	None
	H	20.8 mA
	L	3.8 mA
Output current	No (none)	
	3.8000 mA	
	4.0000 mA	
	8.0000 mA	
	12.000 mA	
	16.000 mA	
	20.000 mA	
	20.800 mA	
Density	0.0001-99999	
Centre distance	0.0001-99999	
Coefficient	0.0001-99999	

5.5 Modbus Programming Menu

5.5.1 Key Operation

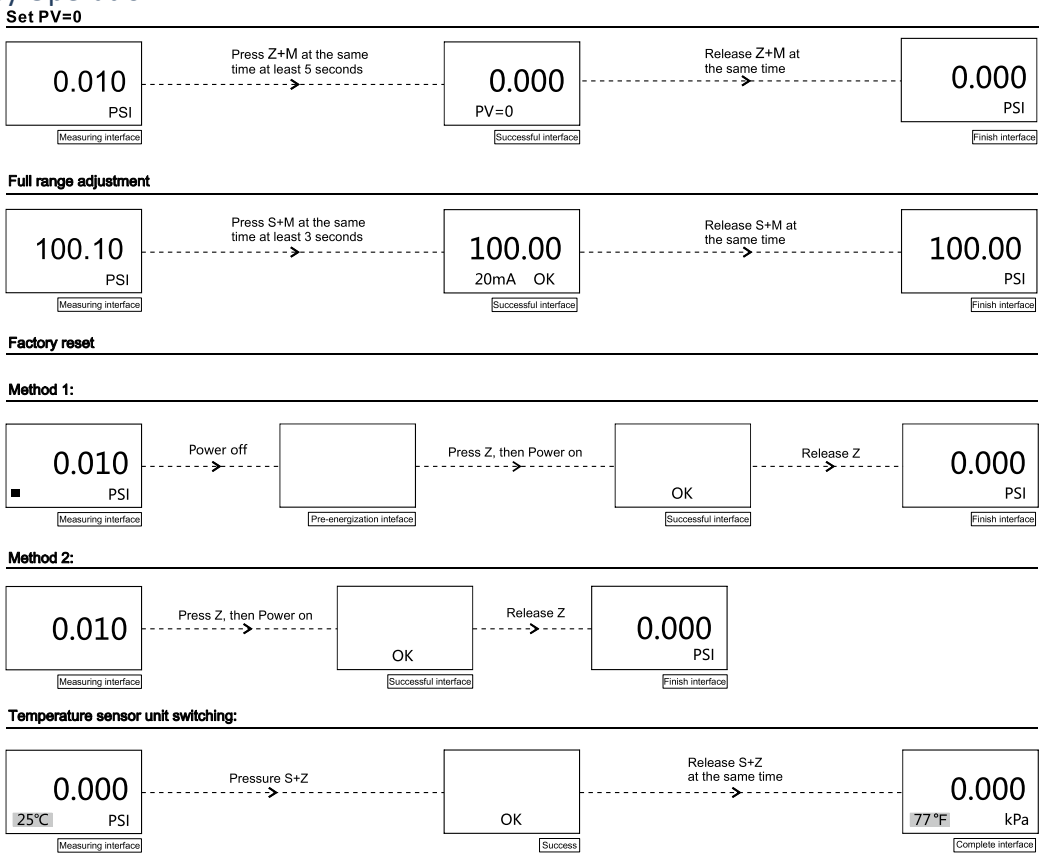

5.5.2 Detailed operating instructions

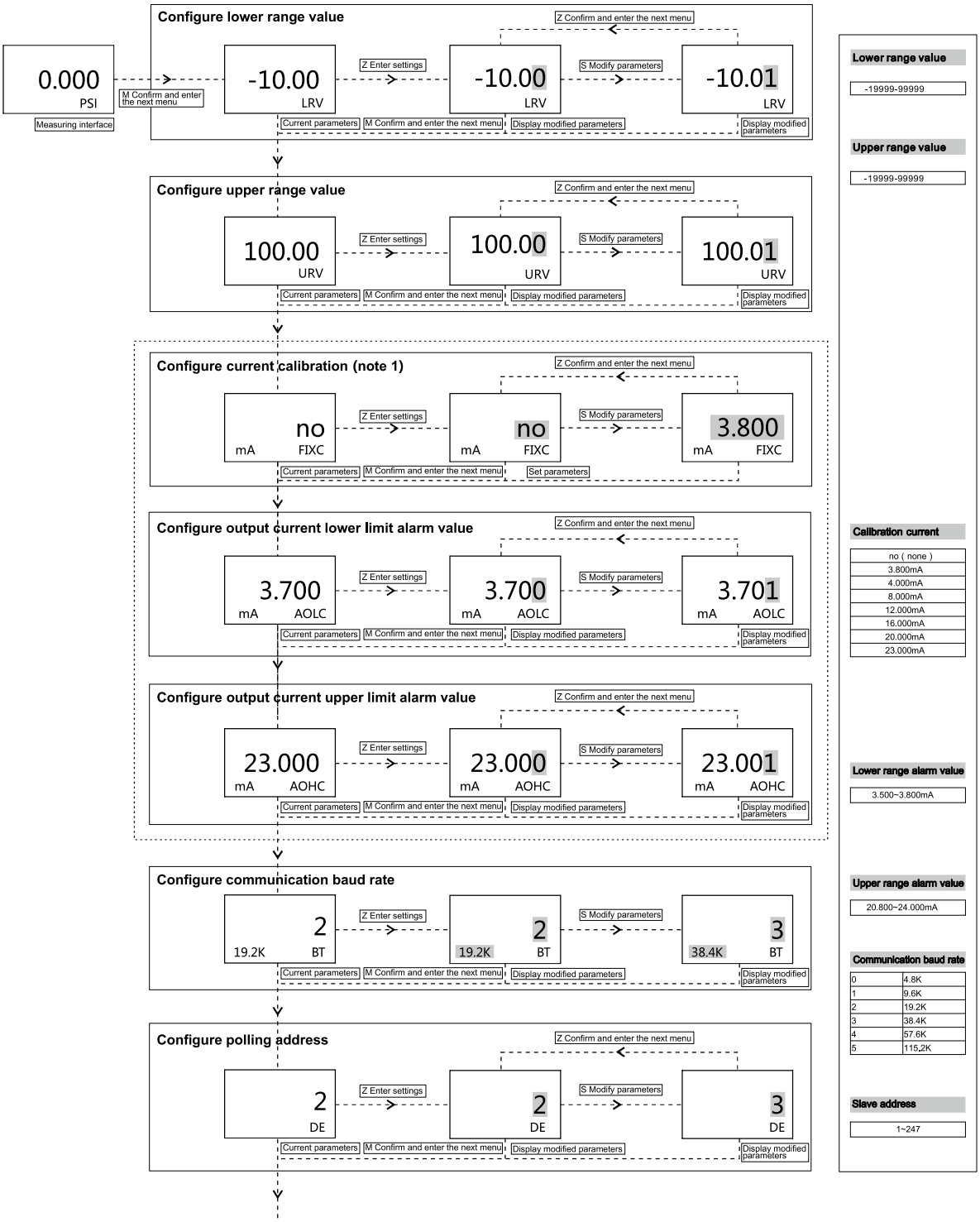

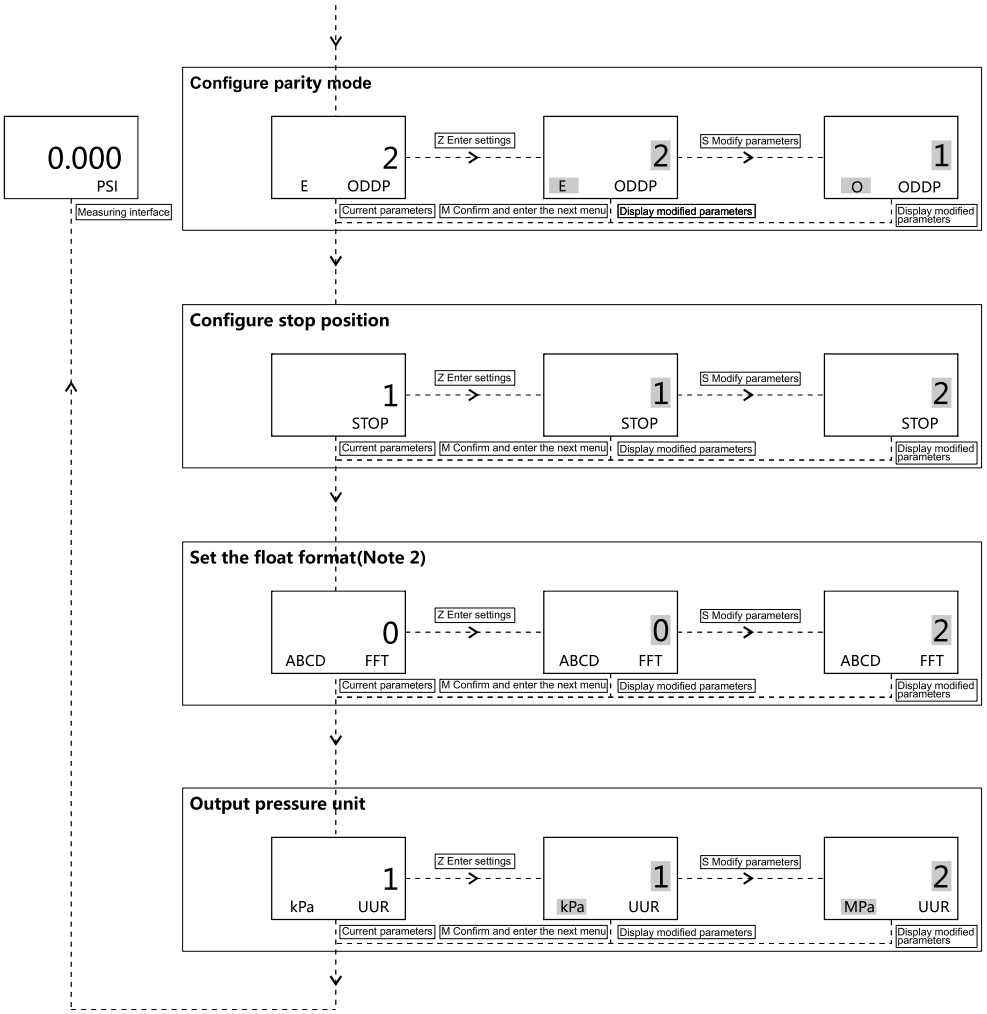

Parameters table

Configure parity mode

0	N	No
1	O	ODD Parity
2	E	Even parity

Stop position

1	1 Stop position
2	2 Stop position

Float format

0	ABCD
1	CDAB
2	BADC
3	DCBA

Pressure unit

Value	Unit
0	None
1	kPa
2	Mpa
3	Pa
4	bar
5	mbar
6	psi
7	mH2o@4C
8	mmH2O@4C
9	cmH2O@4C
10	inH2O@4C
11	ftH2O@4C
12	cmHg@0C
13	mmHg@0C
14	inHg@0C
15	kg/cm2
16	g/cm2
17	Torr
18	Atm
19	m
20	mm
21	osi
22	psf

5.6 Menu Tree

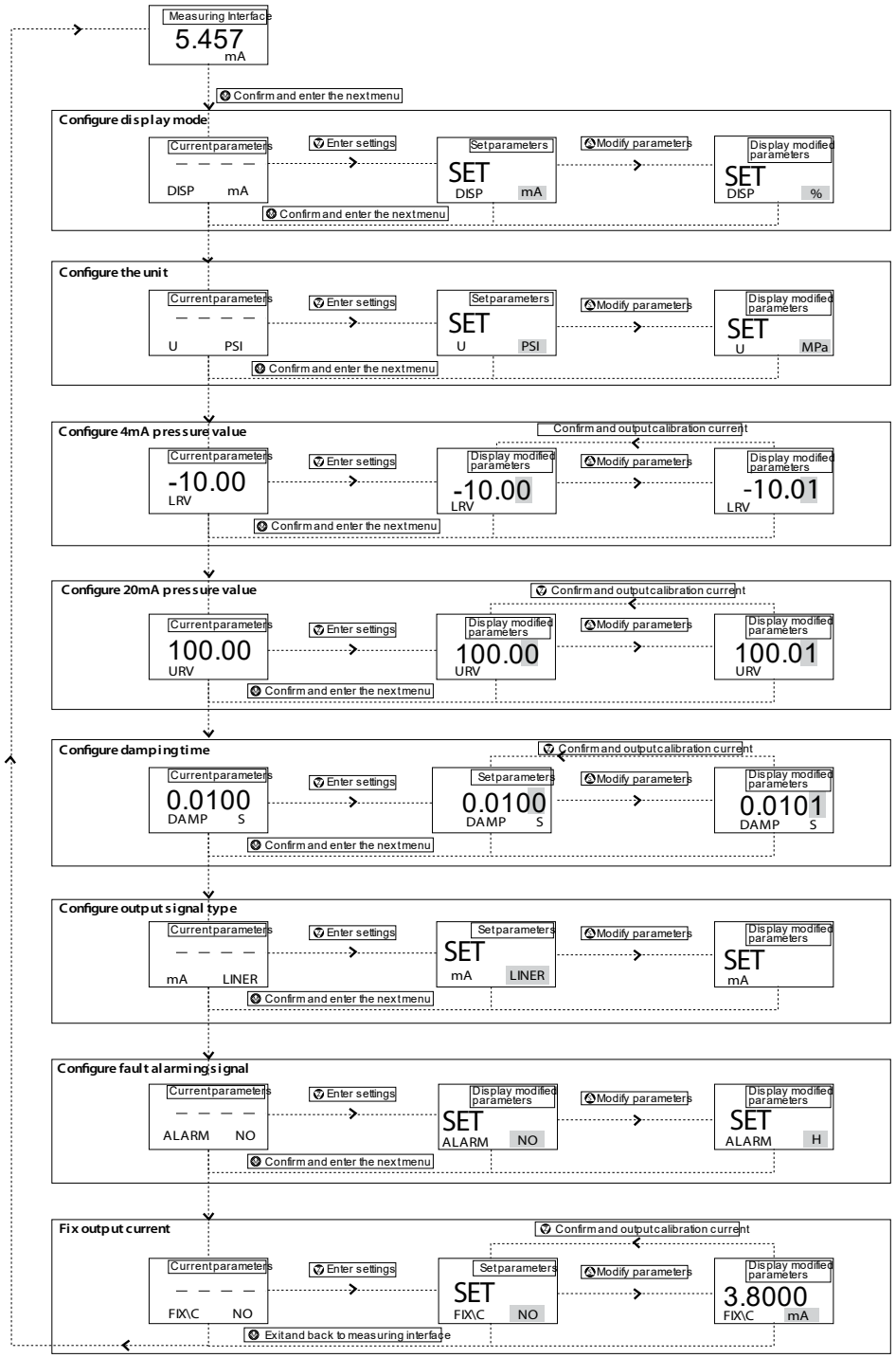

Parameters table

Display mode

%	Percentage
PV	Process variable
mA	Current

Units (⊘↓, ⊘↑)

kPa
MPa
bar
psi
mmHg
mmH2O
mH2O
inH2O
inHg
mHg
TORR
mbar
g/cm2
kg/cm2
Pa
ATM
mm
m

Lower range value

-19999-99999

Upper range value

-19999-99999

Damping time

0 to 100S

Output signal type

√	Square root
LINER	Linearity

Fault alarm signal

NO	None
H	20.8 mA
L	3.8 mA

Output current

NO(none)
3.8000 mA
4.0000 mA
8.0000 mA
12.000 mA
16.000 mA
20.000 mA
20.800 mA

CAUTION

Products without 4-20mA output, FIXC, AOLC, AOHC do not display.

NOTE

1. FIXC is to control fixed current output of products, to check whether output circuit of product current is normal.
   Modify fixed current value by pressing S key and confirm with Z key.
2. The float format parameter is used for the device output pressure/temperature float data format, the factory default ABCD.

5.7 Handheld Communicator

If custom display is not available, then configure transmitter parameter using communicator. Decimal point position, Upper range value, Lower range value, Engineering units are configured. See the below flow chart.

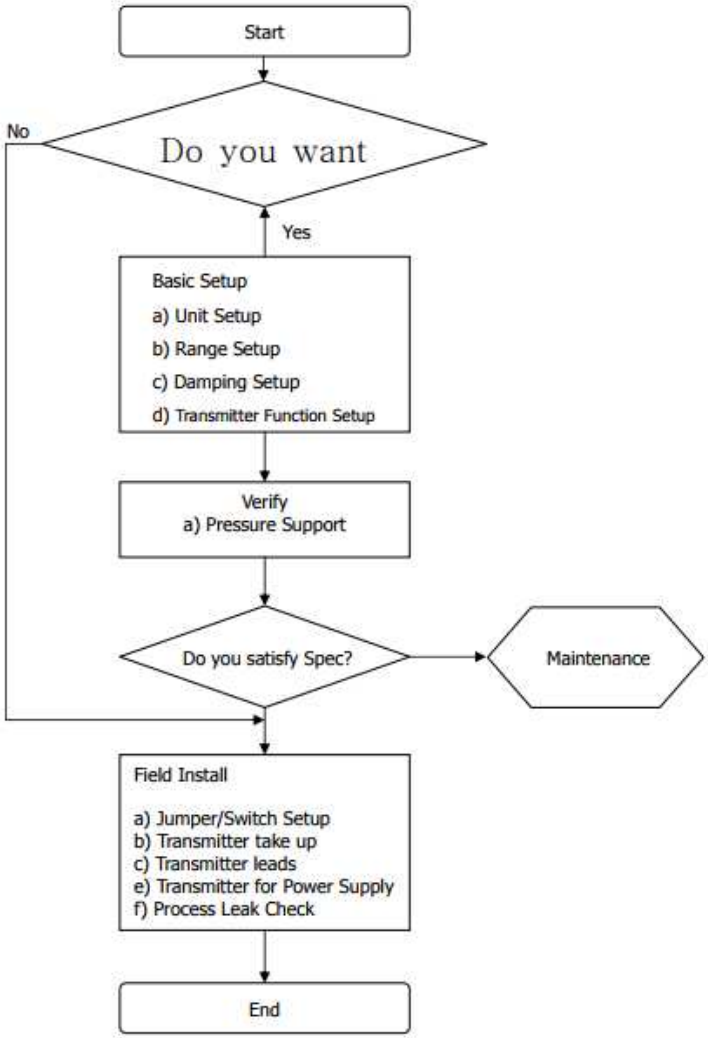

6 Maintenance

This section covers maintenance techniques and guidelines.

WARNING

Explosion can result into a serious injury or death.

- Do not remove the transmitter cover in explosive environments when the circuit is live.
- After disconnecting power wait for a minute to allow the circuit and enclosure to cool down before opening.
- Avoid direct contact with the leads and terminals. High voltage on leads can cause electrical shock.
- Ensure that the transmitter casings are sealed when the assembly is in operating condition.
- Only trained and qualified personnel may undertake start-up and maintenance activities.

6.1 Hardware Maintenance

Perform maintenance task at regular intervals. Set the maintenance schedule in advance and maintain a logbook to note maintenance activity details. Maintenance schedule depends on the system, installation conditions, working medium and rigorousness of the operation. Consider the system downtime when maintenance cycle is running. Ensure that it does not affect the system performance.

Maintenance majorly involves sensor cleaning and verifying connections.

6.1.1 Test Terminal

Test Terminal is marked as TEST on the terminal block. Connect TEST and negative terminal to the test terminal. Ensure that the voltage across the receptacles is kept below the diode threshold voltage so that no current passes through the diode. Make sure that the resistance of the test connection does not exceed 10 ohms while connecting an indicating meter or while taking the test readings. Note that a resistance of 30 ohms can cause an error of approximately 10% of actual value.

6.1.2 Disassembling the Electronics Housing

The transmitter assembly comes in dual-compartment housing; one contains the electronic module, and the other contains all wiring terminals and the communication receptacles. The separate compartment of wiring terminals ensures hassle free handling while running a routine maintenance cycle.

6.1.3 External Cleaning

- Use washing agent that will not damage the instruments.
- Protect the pressure sensing diaphragm from mechanical damage caused by sharp objects or external pressure.
- Mechanical cleaning of the diaphragm is strictly prohibited.
- Do not point the nozzles to the diaphragm when cleaning by pressure washer.

6.1.4 Depot Repair

Execute following steps before sending the device for depot repair:

- Disconnect the transmitter carefully. Preserve all accessories and cables for reassembling.
- Remove the harmful residues such as inflammable, poisonous, cancer genic and radioactive substances.
- Repack the device in original packaging material provided at the time of delivery and send for repair.

6.1.5 Discard Disposal

It is recommended to pass the instrument to specialized recycling companies rather than local recycling points.

7 Troubleshooting

This section provides troubleshooting techniques for most common operating problems.

When device malfunction is suspected despite the absence of any diagnostic messages on the HHT, inspect following points.

- If measurement signal appears irregular, check whether the process pressure is within the working range, or the abnormality lies in the measuring system, installation environment or pressure transmitter. Once diagnosed take corresponding measures.
- If no signal output or unchanged output signal on corresponding process pressure changes is observed, then check the power supply polarity, open or short circuit. Check the parameters like voltage, power and load resistance meet the normal working requirements. Also, ensure there is no leakage or pressure-impulse line blockage and shut-off valve is closed.
- If the output signal is large or outside the normal range, check whether the supply voltage, power consumption, and load resistance meet the normal working requirements of pressure transmitters. Verify measuring range settings and adjust the device calibration. Also, ensure there is no leakage, pressure-impulse line blockage or rapid temperature fluctuations in the installation and shut-off valve is closed.

7.1 Symptoms and Corrective Measures

Refer to the table below to verify whether the transmitter hardware and process connections are in good working condition:

Symptom	Potential Source	Corrective Action
No communication between the Transmitter and HART communicator	Loop Wiring	Check for a minimum of 250 ohms resistance between the power supply and HHT.
		Check for an adequate voltage to the transmitter. The transmitter always requires 11.9 to 45VDC.
		Check for intermittent shorts, open circuits, and multiple grounds
High Output	Sensor Input Failure	Connect HHT and enter the transmitter test mode to isolate a sensor failure.
	Loop Wiring	Check for dirty or defective terminals, interconnecting pins, or receptacles.
	Power Supply	Check the output voltage of the power supply at the transmitter

		terminals. It should be 11.9 to 45 VDC in spite of loop scale
	Electronics Module	Connect HHT and enter the Transmitter test mode to isolate module failure. Check the sensor limits to ensure calibration adjustments are within the sensor range.
Erratic Output	Loop Wiring	Check the output voltage of the power supply at the transmitter terminals. It should be 11.9 to 45 VDC.
		Check for intermittent shorts, open circuits, and multiple grounds.
		Check for proper polarity at the signal terminals.
		In case measuring electric current while digital communication, output appear around +-0.013mA
	Electronics Module	Connect HHT and enter the transmitter test mode to isolate an electronics mode failure.
Low Output or No Output	Sensor Element	Connect HHT and enter the Transmitter test mode to isolate the sensor failure.
		Check the PV to see if it is out of range.
	Loop Wiring	Check for adequate voltage to the transmitter. The transmitter always requires 11.9 to 45VDC.
		Check for intermittent shorts, open circuits, and multiple grounds.
		Check polarity of signal terminal
		Check the loop impedance.
	Electronics Module	Connect HHT and check the sensor limits to ensure calibration adjustments are within the sensor range.

7.2 Tek-Bar 3110B SMART Pressure Transmitter LCD Display error codes

Message	Description
ADJ-U	Out of Zero setting value when Zero Adj function using button (upper side)
ADJ-L	Out of Zero setting value when Zero Adj function using button (lower side)
ZERO	Initial message in using the Zero button
SPAN	Initial message in using the Span button
BT-ERR	Button Input Sequence Error
P-LOCK	Button Input Error when Protect Locked
ZT-ERR	Setting Limit (10%) Error when in Zero Trim
-TR-	Zero Trim Complete
ZR-ERR	Setting Limit Error when executing the Zero button function
-TR-	Zero Trim Complete
ZR-ERR	Setting Limit Error when executing the Zero button function
SP-ERR	Setting Limit Error when executing the Span button function
-ZR-	Zero button function Complete
-SP-	Span button function Complete
-ZA-	Zero Adjustment done
-DONE-	Setting Done using button
RNGOVR	Setting Limit error when executing other setting function
LCD_OV	Over figure values for LCD
SCD-ER	Sensor Code Error
F-RST	Flash Setting Data Rese
F-LOCK	While Flash Setting Data Reset, Protect Locked
F-FAIL	Flash Setting Data Reset Failure
-FR-	Flash Reset Done
A-RST	Analog EEPROM Initializing Start
A-STOR	Analog EEPROM Whole Write
A-FAIL	Analog EEPROM Whole Write Failure

TEKMATION LLC reserves the right to change the designs and/or materials of its products without notice. The contents of this publication are the property of TEKMATION and can not be reproduced by any other party without written permission. All rights reserved. Copyright © 2020 TEKMATION LLC
TEKMATION LLC
DOC#TEK/PO/MNL/2111/15/31108/r01.5

www.tek-trol.com

Tek-Trol LLC
796 Tek Drive Crystal Lake,
IL 60014, USA
Sales: +1 847-857-6076

Tek-Dpro Flow Solutions
PO Box 121 Windsor,
Colorado 80550, USA
Sales: +1 847-857-6076

Tek-Trol Solutions BV
Florijnstraat 18, 4879 AH
Etten-Leur, Netherlands
Sales: +31 76-2031908

Tek-Trol Middle East FZE
SAIF Zone, Y1-067,PO BOX No.
21125, Sharjah, UAE
Sales: +971-6526-8344

Support: +1 847-857-6076 | Email: tektrol@tek-trol.com | www.tek-trol.com

Tek-Trol is a fully owned subsidiary of TEKMATION LLC. We offer our customers a comprehensive range of products and solutionsfor process, power and oil & gas industries. Tek-Trol provides process measurement and control products for Flow, Level, Temperature & Pressure Measurement, Control Valves & Analyzer systems. We are present in 15 locations globally and are known for our knowledge, innovative solutions, reliable products and global presence.

Flow | Level | Temperature | Pressure | Valves | Analyzers | Accessories | TekValSys