TEKTROL
Technology Solutions

TEK-MANIFOLD 7500A

Manifolds

ACCESSORIES

www.tek-trol.com

Flow | Level | Temperature | Pressure | Valves | Analyzers | Accessories | TekValSys

Introduction

Tek-Trol's Tek-Manifold 7500A is available in 3 styles i.e. The 2-Way manifold valve, the 3-Way manifold valve and the 5-Way manifold valve. The 2-Way manifolds are designed for static pressure and liquid level applications, the 3 and 5-Way manifolds are designed for Differential Pressure applications. These manifolds are available in traditional and compact body designs. These Manifolds are designed to work under the pressure of 6000 psi (413 Bar) and are available in PTFE packing for normal temperature.

Benefits

- Available with flanged or threaded process connections
- Max. working pressure of 10000psi
- Hydrostatic tested to 18000psi
- All the valves are 100% factory tested
- All 316SS and PTFE wetted materials

Application

- Oil and Gas Industry
- Chemical Industry
- Power Plants
- Seawater Desalination Plants
- Steel Mills
- Cement Plants
- Water Incineration Plants

Specifications

End Connections	Flange X Flange, Flange X ½" FNPT, Male X Female ½" NPT
Working Pressure	6000psi (413 Bar) and 10000psi (680 Bar)
Temperature Rating	PTFE, 450 °F (232 °C)
Stem Packing	PTFE
Lubricant	Moly Disulphide
Materials of Construction	SS316

Design Features

- Metal to metal bonnet seal
- Corrosion resistance
- Designed for repeated on/off cycles
- Bubble tight seal
- Rising Stem

Bonnet Assembly

- Screw bonnet design
- Stem – burnished stem for smooth operation and packing durability
- Stem tip – Non rotating V tip for bubble tight shut off
- Bonnet pusher – Duly machined for smooth stem cycle
- Dust Cap and Thread Caps – Protects stem threads

Operation

	2-WAY MANIFOLD	3-WAY MANIFOLD	5-WAY MANIFOLD
Components	Consists of 1 block valve and 1 bleed valve	Consists of 2 block valves and 1 equalize valve	Consists of 2 block valves, 2 bleed valves and 1 equalize valve
Operation	During the operation, the block valve is opened and the bleed valve is closed	During the operation, both the block valves are opened while the equalizing valve is closed to read a differential pressure to the transmitter.	During the operation, both block valves are open, while the equalizing and bleed valves are closed to read a differential pressure to the transmitter.
Zeroing of Transmitter	-	Isolate the Transmitter from the process. Close the Block valve and open the equalizing valve slowly to equalize the pressure on both sides of the Transmitter. The Transmitter should decrease and read zero signal at this stage.	Isolate the Transmitter from the process. Close the Bleed valves and Block valve of the low pressure side but open the equalizing valve slowly to equalize the pressure on both sides of the Transmitter. The Transmitter should decrease and read zero signal at this stage.
Calibration of Transmitter	To calibrate the Pressure Transmitter, simply close the block valve and open the bleed valve	Close all the valves. Open the equalizing valves. Open the bleed valves to vent process pressure to the atmosphere. Close the Bleed valve. Apply the Calibrator to the HP and LP side. Using HART calibrator adjust the zero span at zero pressure and then for the maximum pressure.	Close all the valves. Open the equalizing valves. Open the bleed valves to vent process pressure to the atmosphere. Close the Bleed valve. Apply the Calibrator to the HP and LP side. Using HART calibrator adjust the zero span at zero pressure and then for the maximum pressure.
Removal of Transmitter	To remove the instrument, close the block valve first, and open the bleed valve to relieve pressure upstream of the block valve.	To remove the Manifold Valve, close LP block valves, open equalizing valves, close HP block valves.	To remove the Manifold Valve, close HP and LP block valves, open equalizing valves, open bleed valves to vent Pressure

Dimensional Drawings

2-Way Manifold Models

- Tek-Manifold 7500A-2VM-FF-8N-SS

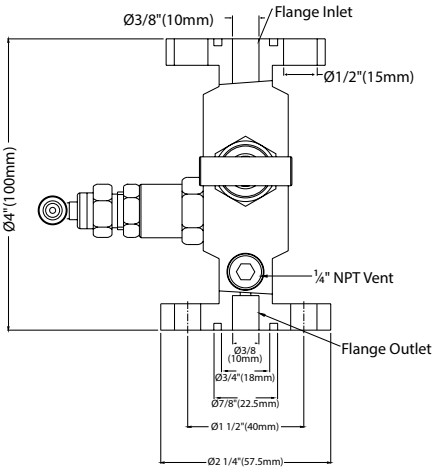

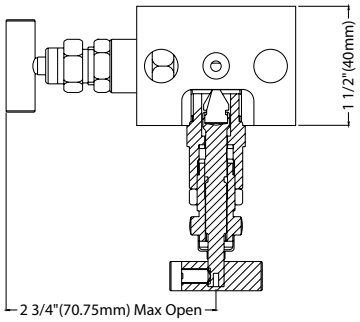

- Tek-Manifold 7500A-2VM-PF-8N-SS

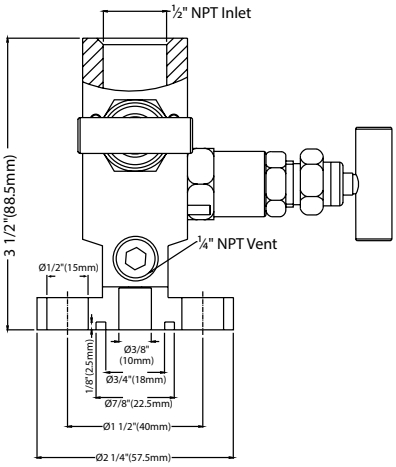

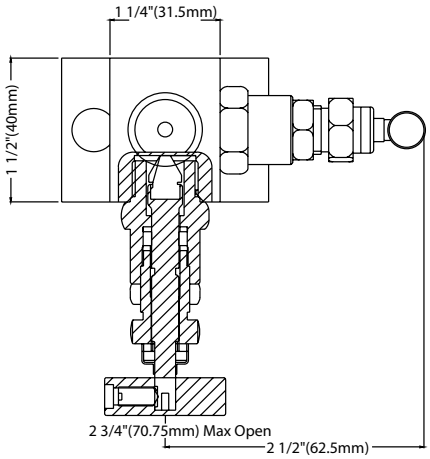

- Tek-Manifold 7500A-2VM-RM-8N-SS

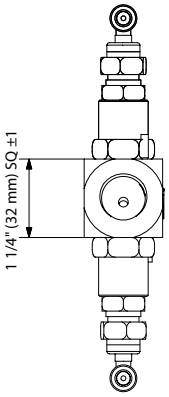

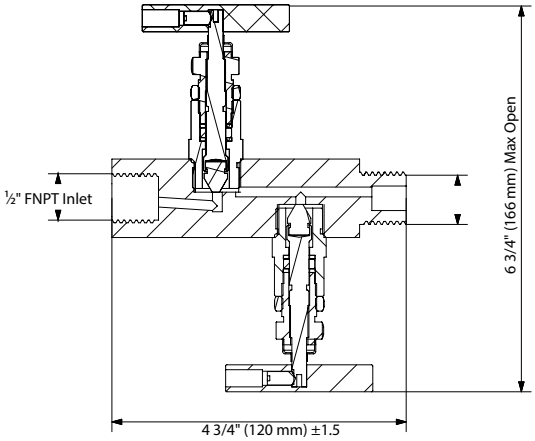

- Tek-Manifold 7500A-2VM-RM-8N-SS

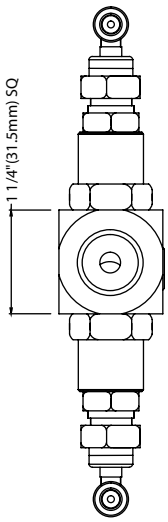

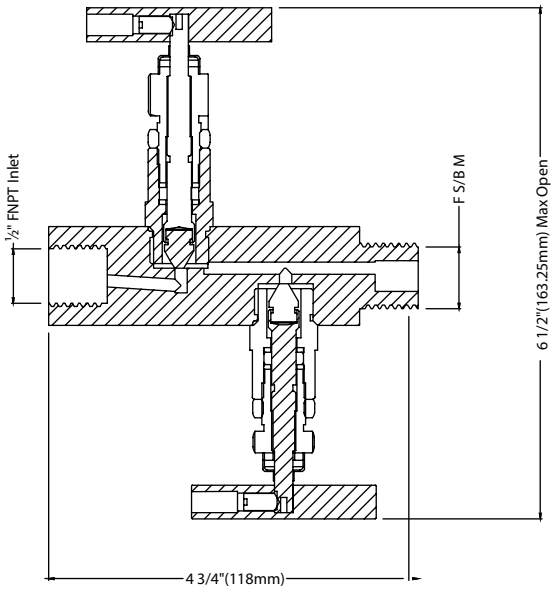

3-Way Manifold Models

- Tek-Manifold 7500A-3VM-FF-8N-SS

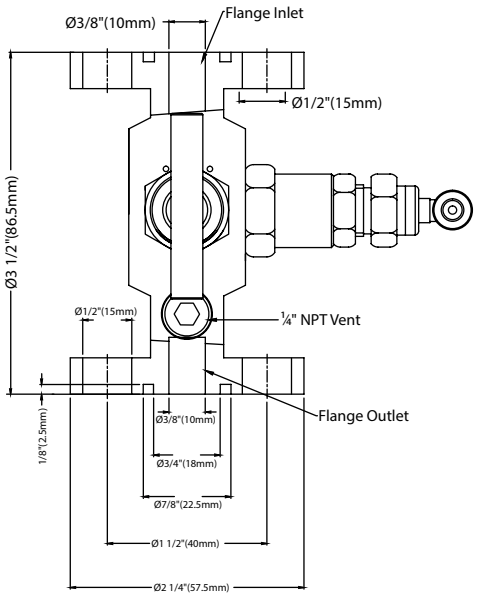

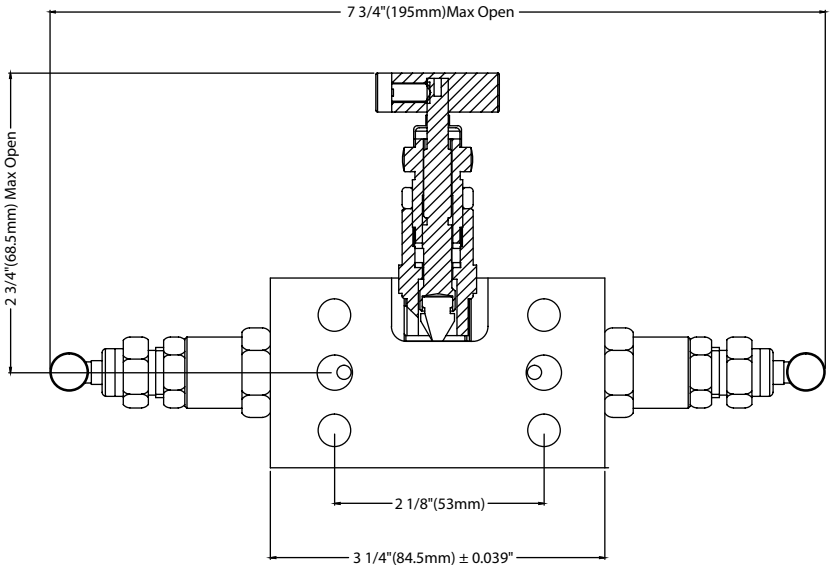

- ## Tek-Manifold 7500A-3VM-PF-8N-SS

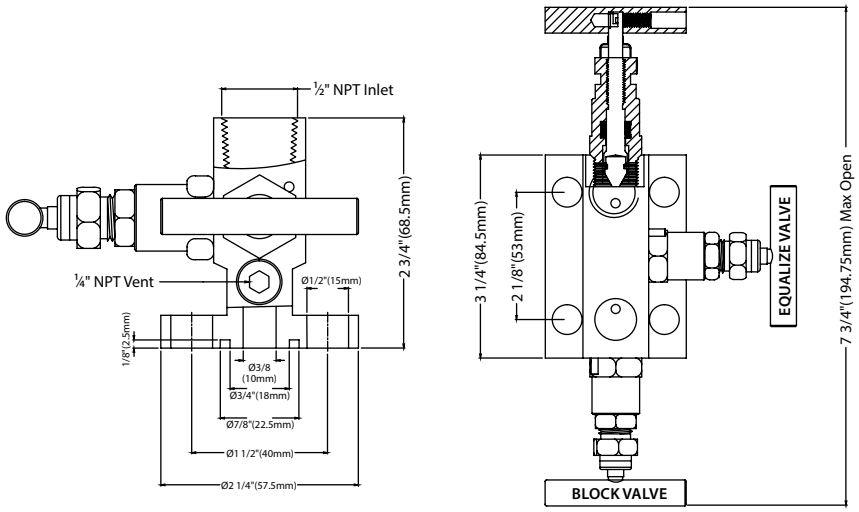

- ## Tek-Manifold 7500A-3VM-FF-8N-SS

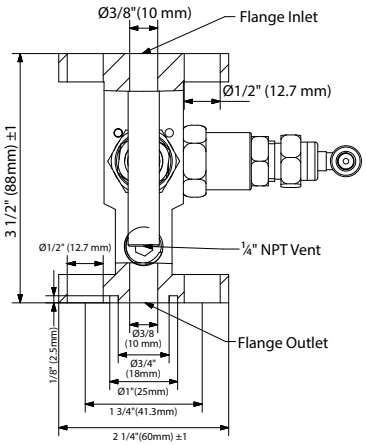

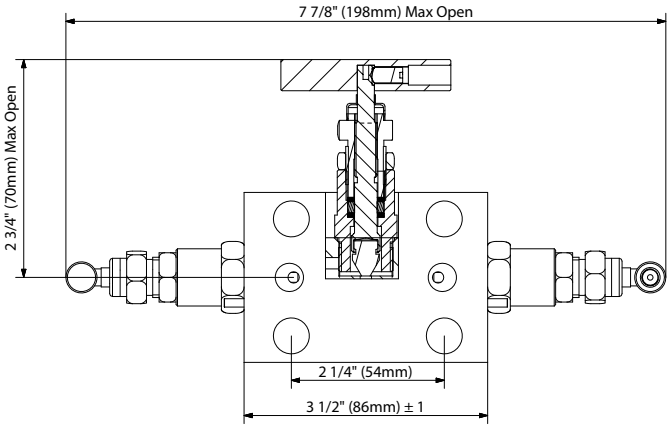

- ## Tek-Manifold 7500A-2BB-RM-8N-SS

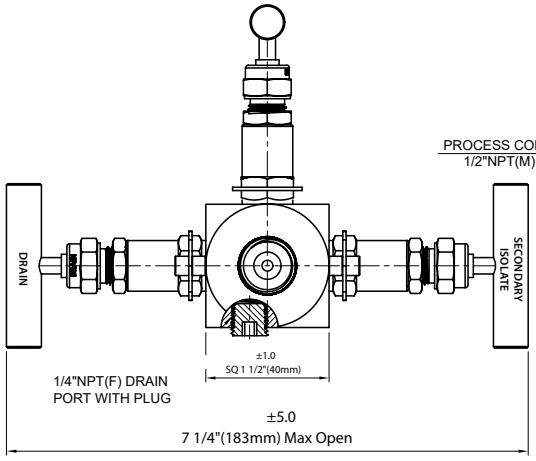

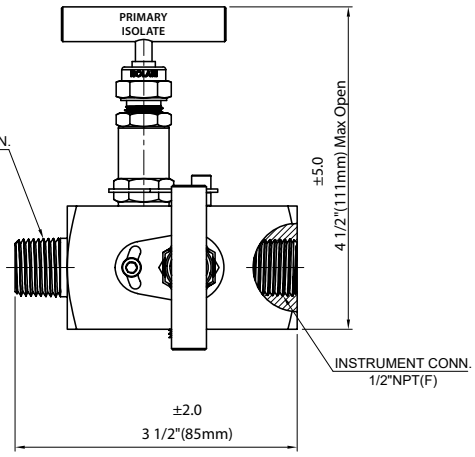

- Tek-Manifold 7500A-2BB-RM-8N-SS-10

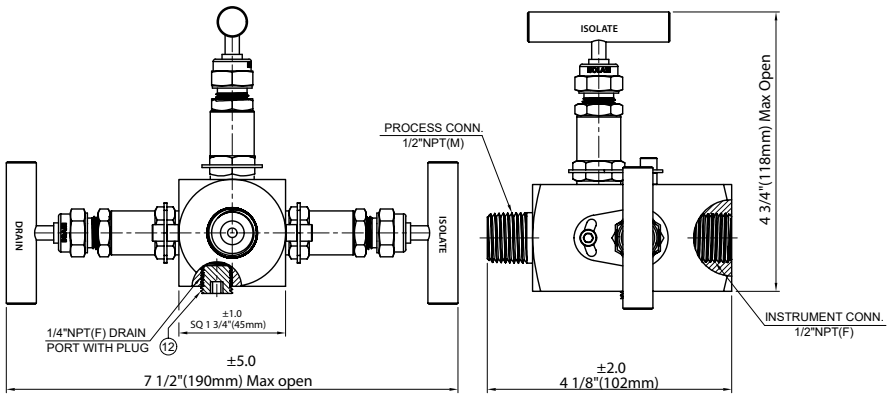

5-Way Manifold Models

- Tek-Manifold 7500A-5VM-FF-8N-SS

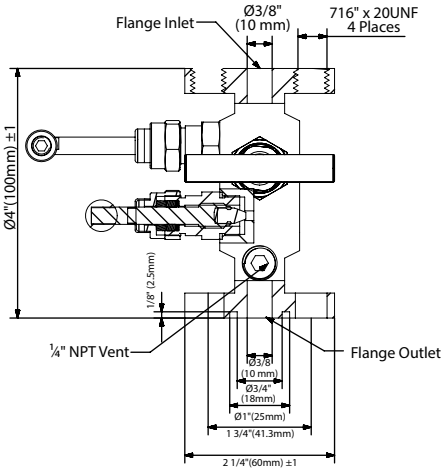

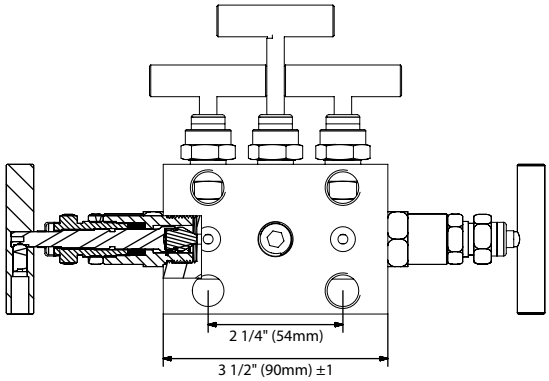

- Tek-Manifold 7500A-5VM-PF-8N-SS

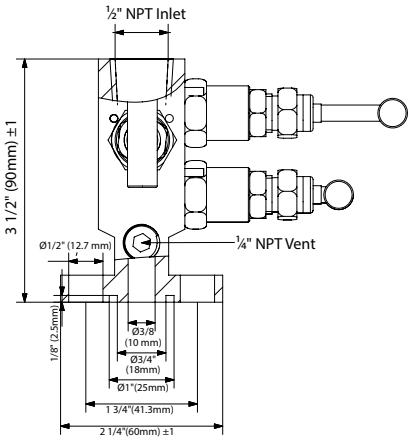

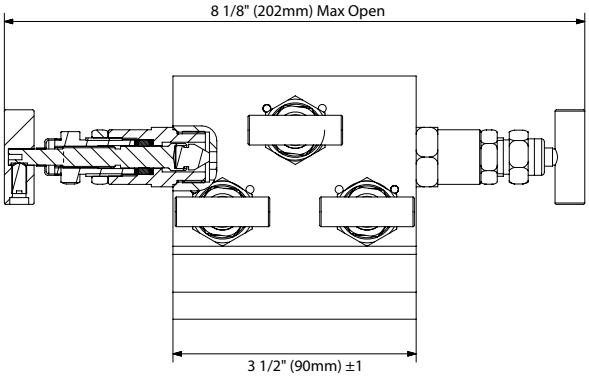

- ## Tek-Manifold 7500A-5VM-CP-8N-SS

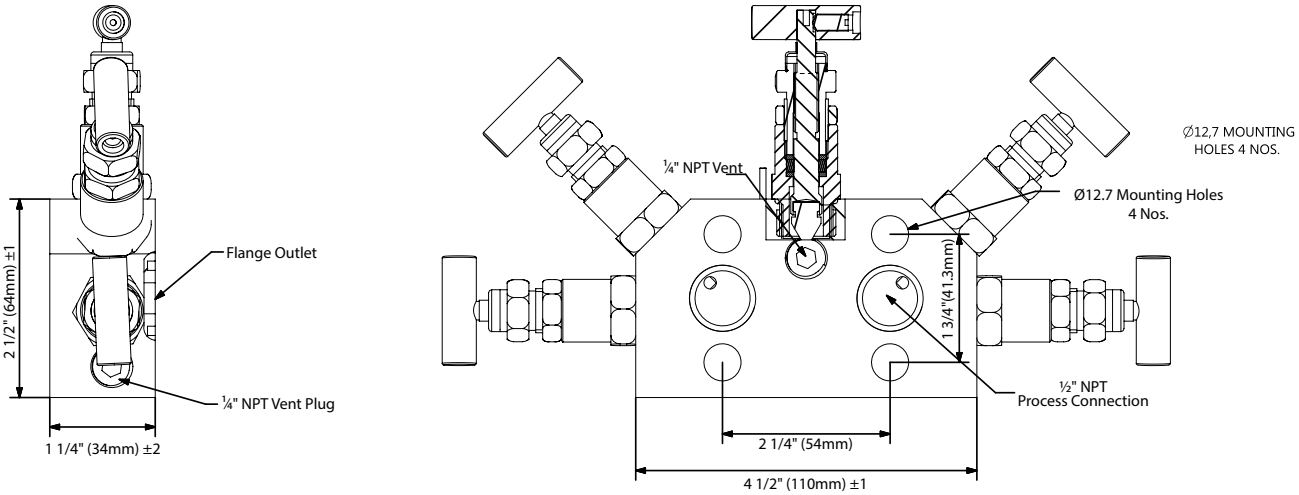

- ## Tek-Manifold 7500A-5VM-PF-8N-SS

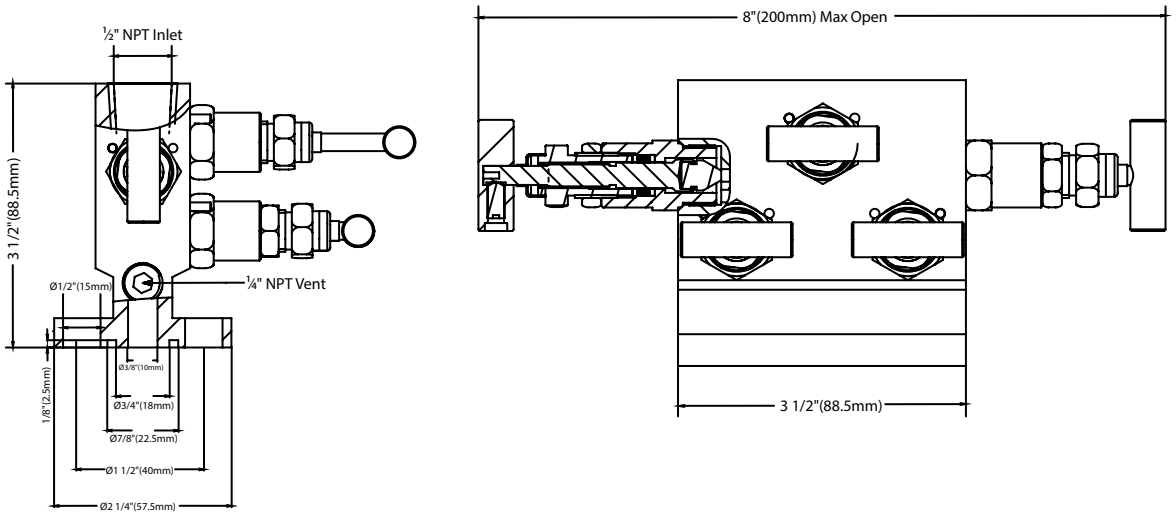

- ## Tek-Manifold 7500A-5VM-CP-8N-SS

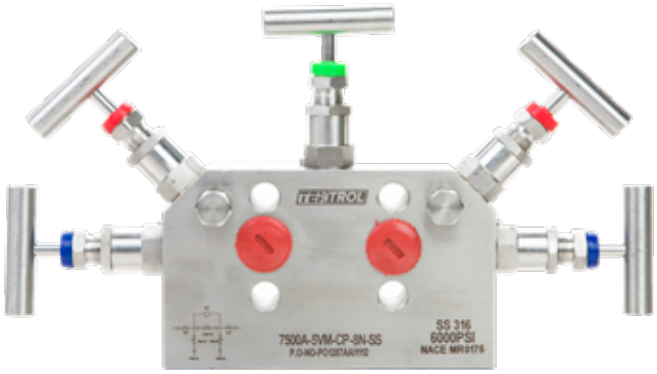

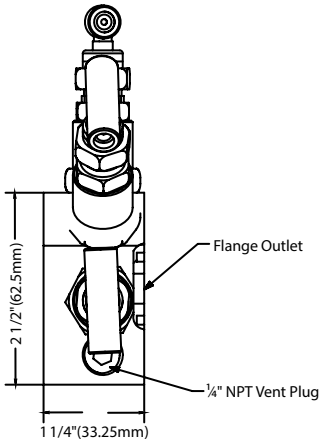

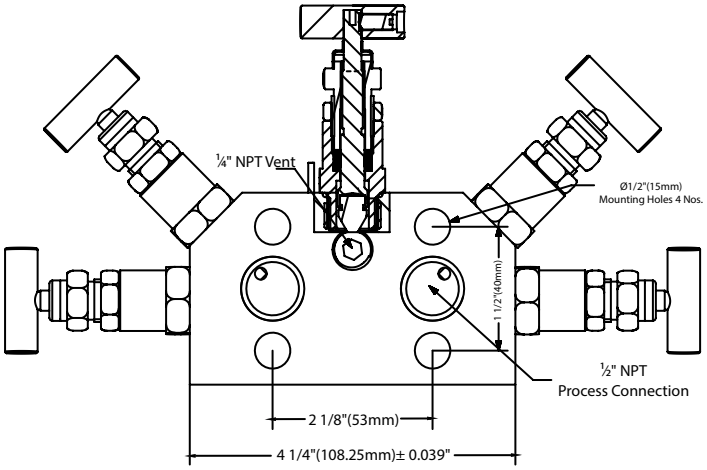

- ## Tek-Manifold 7500A-2BB-RT150-8NF-SS

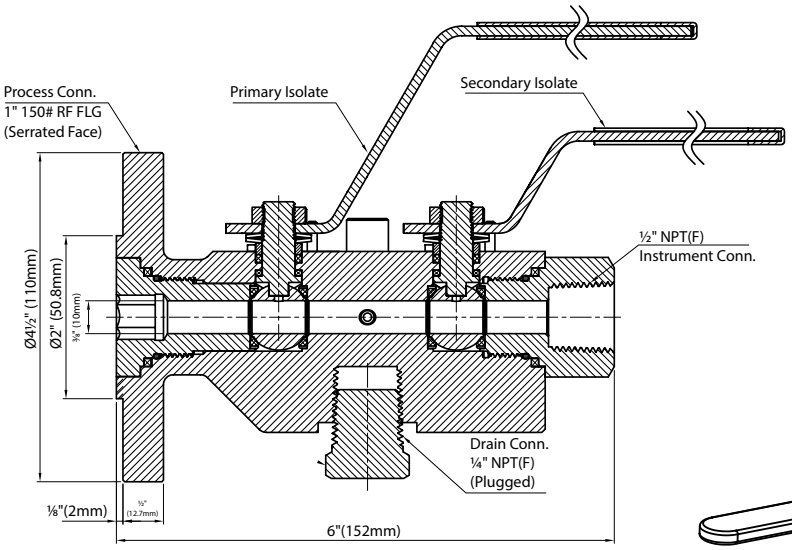

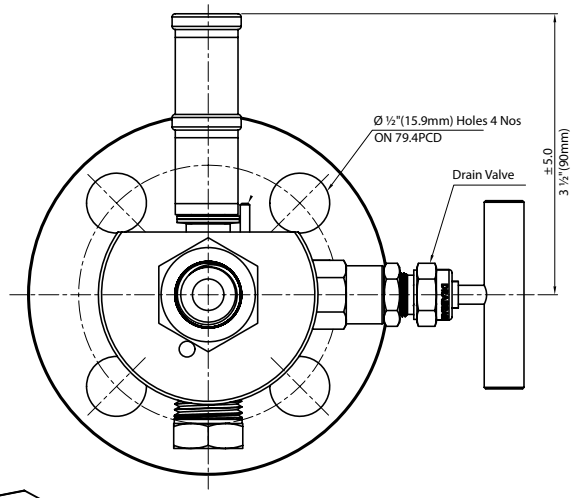

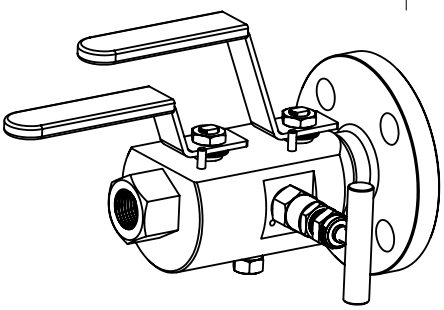

- Tek-Manifold 7500A-2BB-RT600-8NF-SS

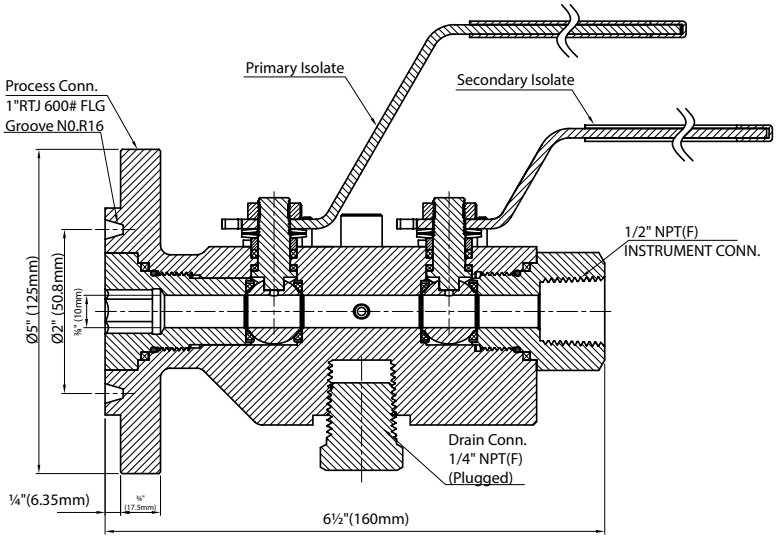

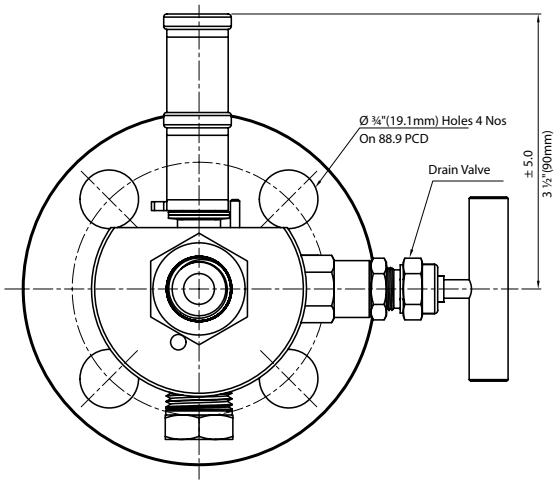

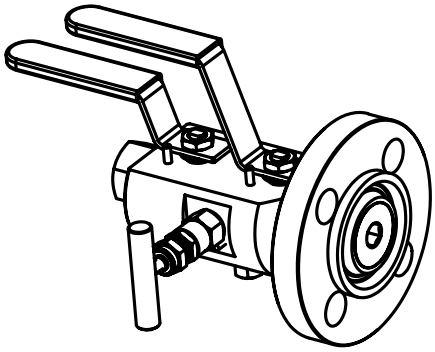

Popular Models

Model Number	Description
7500A-5VM-FF-8N-SS	5-Way, Flange X Flange, PTFE seals, 316SS body, 6000psi
7500A-5VM-PF-8N-SS	5-Way, Flange X ½" FNPT, PTFE seals, 316SS body, 6000psi
7500A-5VM-CP-8N-SS	5-Way, Multiplanar, PTFE seals, 316SS body, 6000psi
7500A-3VM-FF-8N-SS	3-Way, Flange X Flange, PTFE seals, 316SS body, 6000psi
7500A-3VM-PF-8N-SS	3-Way, Flange X ½" FNPT, PTFE seals, 316SS body, 6000psi
7500A-2VM-FF-8N-SS	2-Way, Flange X Flange, PTFE seals, 316SS body, 6000psi
7500A-2VM-PF-8N-SS	2-Way, Flange X ½" FNPT, PTFE seals, 316SS body, 6000psi
7500A-2VM-RM-8N-SS	2-Way, Male X Female ½" NPT, PTFE seals, 316SS body, 6000psi
7500A-2BB-RM-8N-SS	2-Way, ½" FNPT X ½" MNPT, PTFE seals, 316SS body,: 6000psig, DBB
7500A-2BB-RM-8N-SS-10	2-Way, ½" FNPT X ½" MNPT, PTFE seals, 316SS body,: 10000psig, DBB
7500A-2BB-RT150-8NF-SS	2-Way, 150# RTJ X ½" FNPT, PTFE seals, 316SS body, DDB
7500A-2BB-RT600-8NF-SS	2-Way, 600# RTJ X ½" FNPT, PTFE seals, 316SS body, DDB

Adapters

Model Number	Description
7560A-HN-8N-SS	½" MNPT X ½" MNPT
7560A-HN-4N-SS	¼" MNPT X ¼" MNPT
7560A-HRN-8N-4N-SS	½" MNPT X ¼" MNPT
7560A-RA-8N-4N-SS	¼" MNPT X ½" FNPT
7560A-RB-8N-4N-SS	½" MNPT X ¼" FNPT
7560A-HRN-4N-2N-SS	⅛" MNPT X ¼" MNPT
7560A-HRN-8N-2N-SS	⅛" MNPT X ½" MNPT
7560A-RA-4N-2N-SS	⅛" MNPT X ¼" FNPT
7560A-RA-8N-2N-SS	⅛" MNPT X ½" FNPT
7560A-HRC-4N-2N-SS	⅛" FNPT X ¼" FNPT
7560A-HRC-8N-2N-SS	⅛" FNPT X ½" FNPT
7560A-2BB-RM-8N-SS	½" MNPT X ½" FNPT
7560A-2BB-RM-8N-SS-10	½" MNPT X ½" FNPT
7560A-HC-8N-SS	½" FNPT X ½" FNPT
7560A-HC-8N-SS-10	½" FNPT X ½" FNPT 10000psi

Tube Fittings

Model Number	Description
7500A-4T-MC-8N	½" Male X ¼" Tube OD
7500A-8T-MC-8N	½" Male X ½" Tube OD
7500A-2T-MC-2N	⅛" Male X 1⁄8" Tube OD
7500A-2T-FC-2N	⅛" Female X 1⁄8" Tube OD

Tee

Model Number	Description
7500A-4T-UT	¼" Union Tee
7500A-8T-UT	½" Tube OD Union Tee
7500A-2T-U	⅛" Union
7500A-2T-UE	⅛" Union Elbow
7500A-2T-UT	⅛" Union Tee

Customer Service & Support

www.tek-trol.com

Tek-Trol LLC

796 Tek Drive Crystal Lake, IL 60014,
USA
Sales: +1 847-857-6076

Tek-DPro Flow Solutions

PO Box 121 Windsor, Colorado 80550,
USA
Sales: +1 847-857-6076

Tek-Trol Solutions BV

Florijnstraat 18, 4879 AH Etten-Leur,
Netherlands
Sales: +31 76-2031908

Tek-Trol Middle East FZE

SAIF Zone, Y1-067, PO BOX No.
21125, Sharjah, UAE
Sales: +971-6526-8344

Support: +1 847-857-6076 | Email: tektrol@tek-trol.com | www.tek-trol.com

Tek-Trol is a fully owned subsidiary of TEKMATION LLC. We offer our customers a comprehensive range of products and solutions for process, power and oil & gas industries. Tek-Trol provides process measurement and control products for Flow, Level, Temperature & Pressure measurement, Control valves & Analyzer systems. We are present in 15 locations globally and are known for our knowledge, innovative solutions, reliable products and global presence.

TEK-TROL LLC reserves the right to change the designs and/or materials of its products without notice. The contents of this publication are the property of TEK-TROL LLC and cannot be reproduced by any other party without written permission. All rights reserved. Copyright © 2021 TEK-TROL LLC
TEK-TROL LLC
DOC # TEK/PO/CAT/211117/7500A/r02.3